THOMSON CONSUMER ELECTRONICS

Brandt FERGUSON NORDMENDE SABA TELEFUNKEN THOMSON

THOMSON
WS3268N
Chassis ICC11-DM
Europa

PARTS LIST - LISTE PIÈCES DÉTACHÉES - ERSATZTEILLISTE - LISTA PARTI DI RICAMBIO - LISTA DE PIEZAS DE REPUESTO

Pos.	Art.-Nr Part No. Code	Bezeichnung	Part	Désignation
		MOD. / AUSTAUSCHTEI	**EXCHANGE PARTS:**	**ECHANGE PLATINE:**
AMFM	102.969.60	AM/FM9113 11DM TON-MODUL	AM/FM9113 11DM PCB SOUND	MA/FI9113 11DM PLATINE
CRT	104.517.60	CRT BS4139 11DM BILDOHRANSCHLUSS	CRTBS4139 11DM PCB CRT-SOCKET	CRTBS4139 11DM PLATINE
DFB	104.970.10	DFB4014 11DM LTP DYNAMIC FOKUS BOAR	DFB4014 11DM PCB	DFB4014 11DM PLATINE
IF	104.441.20	IF3353 ZF-VERSTÄRKER	IF3353 UNIT	MF3353 UNITE
MTP	204.988.10	MTP4015FN TUNER VP	MTP4015FN TUNER	MTP4015FN TUNER
PIP	103.283.50	PIP4001 BILD IM BILD	PIP4001 PICTURE IN PICTURE	PIP4001 PLATINE
SAT	104.563.20	SUB SAT 4002 LEITERPLATTE	SUB SAT 4002 P.C.B.	SUB SAT 4002 PLATINE
VM	104.479.40	VM4034 11DM VIDEO- U. TEXT MODUL	VM4034 P.C.B. VIDEO	VM4034 PLATINE VIDEO
		MOD. / KEIN AUSTAUSC	**MODULES:**	**PLATINE:**
FCB	252.191.80	FCB4019 LTP FRONTBUCHSEN	FCB4019 PCB SOCKETS	FCB4019 PLATINE
KDB	252.191.20	KDB4007 BEDIENTEIL KPL	KDB4007 CONTROL UNIT	KDB4007 PL DE COMMANDES
LDN	250.870.00	LDN9003 FREQUENZWEICHE	LDN9003 PCB FREQ. DIV. NETW.	LDN9003 PLATINE
MIS	252.344.50	MIS4002 11 NETZFILTER	MIS4002 11 PCB	MIS4002 11 PLATINE
RC	102.045.70	RC1360 FB-GEBER	REMOTE CONTROL UNIT	TELECOMMANDE
RC	101.564.60	RC1131 FB-GEBER	REMOTE CONTROL	TELECOMMANDE
SCI	101.319.80	SCI4000 LTP SCHNITTSTELLE	SCI4000 P.C.B. INTERFACE	PLATINE SCI4000
		ALLGEMEINE TEILE: **FARBBILDRÖHRE :**	**GENERAL PARTS:** **COLOUR CATHODE RAY TUBE :**	**PIECES DIVERS:** **TUBE CATHODIQUE COULEUR :**
-	103.414.70	W76EGX023X122 Farbbildröhre	Colour cathode ray tube	Tube cathodique couleur
-	102.948.00	Leitung mit Stecker 2polig 380mm WS	Cable with socket 2-pole 380mm	Cable avec fiche 2-polaire 380mm
-	103.079.50	Masseklammer	Earth bracket	Contact
-	103.368.60	Halter Entmagnetisierungsspule	Degaussing coil holder	Support bobine de demag.
-	103.413.70	Zugfeder	Degaussing coil support	Support bobine de demag.
-	104.419.50	Leitung mit Stecker 2polig 340mm BL	Cable with socket 2-pole 340mm	Cable avec fiche 2-pol. 340mm
-	300.978.00	Eckeinsatz f. Bildrohr	Condition for CRT corner	Piece d'insertion
-	473.201.46	Entmagnetisierungsspule	Degaussing coil	Bobine de demagnetisation
		GEHÄUSETEILE MECHANISCH :	**CABINET PARTS MECHANIC :**	**PIECES DE PRESENTATION MEC.:**
-	252.026.60	Gehäuse FRT CINEV 32M/WS3268N	Cabinet	Coffret
-	250.714.20	Zugentlastung Netzleitung	Main cord stopper	Support cable
-	251.244.20	Abdeckung Chassis	Scart Cinch Cover	Cache
-	251.316.60	Taste Netz	Key ON/OFF	Touche secteur

Listen Nr.: 105.204.60

THOMSON multimedia Sales Germany GmbH & Co. OHG
- SERVICE -
Göttinger Chaussee 76 • 30453 HANNOVER

Pos.	Art.-Nr Part No. Code	Bezeichnung	Part	Désignation
-	251.316.80	Linse LED	LED lens	Lentille LED
-	251.735.30	Tastatur 2fach	Key grape	Clavier
-	251.735.50	Tastatur 4fach	Key grape 4	Clavier
-	252.026.50	Halter Frontbuchsen lak.	Holder front sockets	Support prise
-	252.053.00	Abdeckung Kopfhörerbuchse	Headphone cap	Cache prise
-	252.130.10	RUECKWAND WS3268N	Rear cover	Dos
-	300.623.80	Fenster LED kpl.	Trim window	Enjoliveur
		GEHÄUSETEILE ELEKTRISCH :	**CABINET PARTS ELECTRICAL :**	**PIECES DE PRESENTATION :**
-	103.170.10	4R 23W Lautsprecher	4R 23W Speaker	4R 23W Hautparleur
-	104.419.40	8R 15W Lautsprecher	8R 15W Speaker	8R 15W Hautparleur
		FCB4019 LTP FRONTBUCHSEN	**FCB4019 PCB SOCKETS**	**FCB4019 PLATINE**
BM10	104.876.50	Cinch Buchse	Socket cinch	Plaque de fond Cinch
BM11	203.929.00	Buchse 5-pol. S-VHS	Jack 5-pole	Prise 5 broches
		KDB4007 BEDIENTEIL KPL	**KDB4007 CONTROL UNIT**	**KDB4007 PL DE COMMANDES**
BM12	508.979.80	Kopfhörer Buchse Klinke 6,35mm	Headphone socket	Prise casque femelle
GE01	111.376.50	TLUV5300 LED orange/grün	TLUV5300 LED-Diode	TLUV5300 LED-Diode
GE01A	404.805.50	Halter LED	LED Holder	Support LED
GR01	101.324.10	TFMK1330T IR-Empfönger stehend	TFMK1330T IC	TFMK1330T CI
SM01	300.111.00	Taktschalter	Tact switch	Interrupteur de cadence
SM02	300.111.00	Taktschalter	Tact switch	Interrupteur de cadence
SM03	300.111.00	Taktschalter	Tact switch	Interrupteur de cadence
SM04	300.111.00	Taktschalter	Tact switch	Interrupteur de cadence
SM05	300.111.00	Taktschalter	Tact switch	Interrupteur de cadence
SM06	300.111.00	Taktschalter	Tact switch	Interrupteur de cadence
SP01	102.765.00	Netzschalter	Mains switch	Contacteur secteur
		CHASSISTEILE ELEKTRISCH :	**CHASSIS PARTS ELECTRICAL :**	**PIECE DE CHASSIS ELECTRIQUE :**
CL004	103.634.10	3N3F 2KV 5% Filmkondensator	3N3F 2KV 5% Film cap	3N3F 2KV 5% Condensateur
CL013	404.065.01	11N6F 2KV 2,5% Filmkondensator	11N6F 2KV Film cap	11N6F 2KV Condensateur film
CL014	100.769.20	33NF 400V 5% Filmkondensator	33NF 400V 5% Film cap	33NF 400V 5% Condensateur
CL015	103.763.60	560NF 250V 5% Filmkondensator	560N0F 250V 5% Film cap	560N0F 250V 5% Condensateur
CL040	101.390.00	680N0F 250V 5% Filmkondensator	680N0F 250V 5% Film cap	680N0F 250V 5% Condensateur film
CP102	103.450.50	2N2F 630V 10% Filmkondensator	2N2F 630V 10% Film cap	2N2F 630V 10% Condensateur
CP105	103.450.30	1NF 630V 10% Filmkondensator	1NF 630V 10% Film cap	1NF 630V 10% Condensateur
IR001	101.161.30	ST90R91BC1 IC	ST90R91BC1 IC	ST90R91BC1 CI
LL003	101.532.60	4U2H Spule H-Linearität	4U2H H-Linearity coil	4U2H Bobine linearite
LL004	103.476.50	4MI0H 10% Drossel O.-W.-Spule	4MI0H 10% Choke coil E.-W.-Coil	4MI0H 10% Self
LL008	103.402.10	Diodensplit-Trafo GDS35	Diode split transformer	Transformateur THT
LP020	101.451.70	Trafo Schaltnetzteil SMT1	Switched mode power transformer	Transformateur d'alimentation
LP060	103.321.30	Trafo Schaltnetzteil SMT89	Switched mode power transformer	Transformateur d'alimentation
RL026	104.037.10	46K4R 0,7W 1% Metallfilmwiderstand	46K4R 0,7W 1% Metal film resistor	46K4R 0,7W 1% Resistance metall.
RL038	150.226.00	R270 0,4W 10% Sicherheitswiderstand	R270 0,4W 10% Fusible resistor	R270 0,4W 10% Resistance fusible
-	102.608.80	Netzanschlußleitung mit Drossel	Power cord	Cable secteur
-	101.565.40	Leitung mit Stecker 12polig 420mm	Cable with socket 12-pole 420mm	Cable avec fiche 12-polaire 420mm
-	102.530.50	Leitung mit Stecker 6polig 660mm	Cable with socket 6-pole 660mm	Cable avec fiche, 6-polaire
-	102.530.60	Leitung mit Stecker 9polig 260mm	Cable with socket 9-pole, 260mm	Cable avec fiche, 9-polaire
-	102.536.10	Leitung mit Stecker 2polig 580mm	Cable with socket 2-pole 580mm	Cable avec fiche 2-polaire
-	102.751.30	Leitung mit Stecker GN 3polig 660mm	Cable with socket 3-pole 660mm	Cable avec fiche 3-polaire
-	102.760.80	Leitung mit Stecker 9polig 300mm	Cable with socket 9-pole 300mm	Cable avec fiche 9-polaire
-	103.407.60	Fokuskabel 180mm RT	Focus cable 180mm RT	Cable focus 180mm RT
-	103.407.80	Fokuskabel 450mm RT	Focus cable 450mm RT	Cable focus 450mm RT
-	103.408.10	FOKUSKABEL 450MM SW	Focus cable 450mm	Cable focus 450mm
-	103.607.70	Hochspannungskabel	High tension cable	Cable a haute tension
-	250.919.10	Leitung mit Stecker 2polig 580mm	Cable with socket 2-pole 580mm	Cable avec fiche 2-polaire
-	300.201.70	Leitung mit Stecker 3polig 580mm	Cable with socket 3-pole	Cable avec fiche 3-pol.
		CHASSISTEILE MECHANISCH :	**CHASSIS PARTS :**	**PIECE DE CHASSIS :**
-	101.413.30	Modulhalter VM	Module holder	Support plastique
-	102.231.70	Modulhalter AM/FM	Module holder	Support plastique
-	102.599.90	Halter DFB-BS/EWM-BS	Holder DFB-BS	Support DFB-BS
-	102.799.40	Halter Abschirmblech ICC10	Holder Shielding	Support
-	102.845.50	Halter Sub	Holder Sub	Support Sub
-	102.856.90	Halter Abschirmblech ICC10	Holder Shielding	Support
-	251.791.20	Chassisrahmen	Plastic support chassis	Support plastique chassis

Listen Nr.: 105.204.60

THOMSON multimedia Sales Germany GmbH & Co. OHG
- SERVICE -
Göttinger Chaussee 76 • 30453 HANNOVER

Pos.	Part No. Code	Art.-Nr Bezeichnung	Part	Désignation
		VERPACKUNG	**PACKING**	**EMBALLAGE**
-	251.680.40	Polster oben	Styropor packing	Calage superieur
-	251.680.50	Polster unten	Styropor packing	Calage inferieur
-	251.680.70	Karton TFK	Carton	Emballage carton
		SERVICE-UNTERLAGEN	**SERVICE INFORMATIONS**	**NOTICE TECHNIQUE**
-	104.423.90	ET-Liste ICC11	Spare Parts List	Liste de pieces detachees
-	105.204.60	E-Liste WS3268N	Spare Parts List	Liste de pieces detachees
-	300.752.60	BA WS2868N/WS3268N D/I/F/GB/NL/E	Instruction booklet	Notice d`utilisation
-	350.264.00	Serv.Info ICC11	Service Information Update 11/96	Information technique

Listen Nr.: 105.204.60

THOMSON multimedia Sales Germany GmbH & Co. OHG
- SERVICE -
Göttinger Chaussee 76 • 30453 HANNOVER

THOMSON CONSUMER ELECTRONICS

NORDMENDE SABA TELEFUNKEN THOMSON

SERVICE MANUAL
DOCUMENTATION TECHNIQUE
TECHNISCHE DOKUMENTATION
DOCUMENTAZIONE TECNICA
DOCUMENTACION TECNICA

ICC11 DM

ICC 1 X Y Z

0	0	0
1	1	1
2	2	2
3	3	3
4	4	4
5	5	5
6	6	6
7	7	7
8	8	8
9	9	9

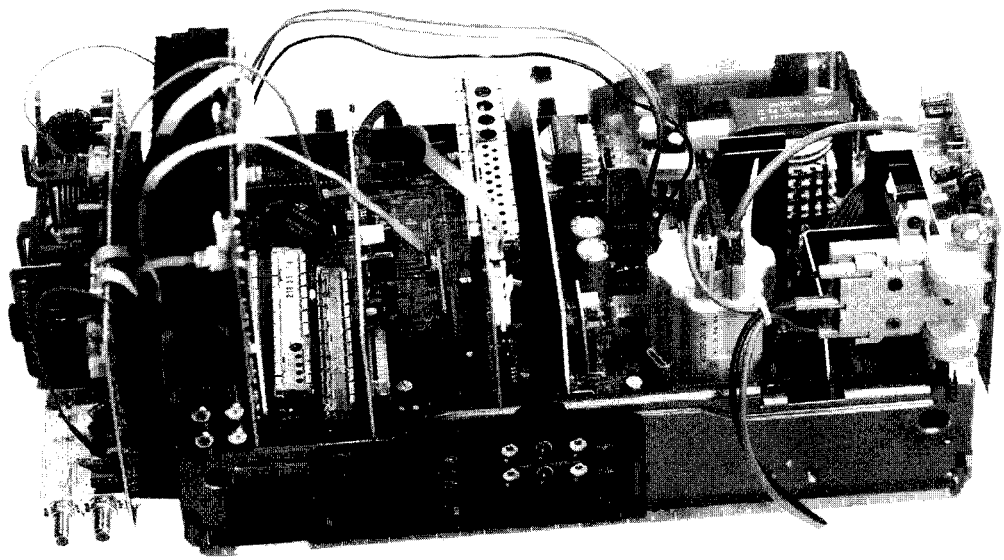

WARNING : *Before servicing this chassis read the safety recommendations.*
ATTENTION : *Avant toute intervention sur ce châssis, lire les recommandations de sécurité.*
ACHTUNG : *Vor jedem Eingriff auf diesem Chassis, die Sicherheitsvorschriften lesen.*
ATTENZIONE : *Prima di intervenire sullo chassis, leggere le norme di sicurezza.*
IMPORTANTE : *Antes de cualquier intervención, leer las recomendaciones de seguridad.*

Code : 103 870 10 - 10/95

No copying, translation, modification on other use authorized. All rights reserved worldwide. • Tous droits de reproduction, de traduction, d'adaptation et d'exécution réservés pour tous les pays. • Sämtliche Urheberrechte an diesen Texten und Zeichnungen stehen uns zu. Nachdrucke, Vervielfältigungen - auch auszugsweise - nur mit unserer vorherigen Zustimmung zulässig. Alle Rechte vorbehalten. • I diritti di riproduzione, di traduzione, e esecuzione sono riservati per tutti i paesi. • Derechos de reproduccion, de traduccion, de adaptacion y de ejecucion reservados para todos los paises.

⚠ Indicates critical safety components, and identical components should be used for replacement. Only then can the operational safety be garanteed.

Le remplacement des éléments de sécurité (repérés avec le symbole ⚠) par des composants non homologués selon la Norme CEI 65 entraine la non-conformité de l'appareil. Dans ce cas, la responsabilité du fabricant n'est plus engagée.

Wenn Sicherheitsteile (mit dem Symbol ⚠ gekennzeichnet) nicht durch Original - Ersatzteile ersetzt werden, erlischt die Haftung des Herstellers.

La sostituzione degli elementi di sicurezza (marcati con il segno ⚠) con componenti non omologati secondo la norma CEI 65 comporta la non conformitá dell'apparecchio. In tal caso è "esclusa la responsabilità " del costruttore.

La sustitución de elementos de seguridad (marcados con el simbolo ⚠) por componentes no homologados segun la norma CEI 65, provoca la no conformidad del aparato. En ese caso, el fabricante cesa de ser responsable.

MEASUREMENT CONDITIONS - CONDITIONS DE MESURES - MESSBEDINGUNGEN CONDIZIONI DI MISURA - CONDICIONES DE MEDIDAS

RECEIVER : On UHF,input level : 1 mV, bar test pattern :
- PAL, I standard, 100% white.

Via the scart socket, input level : 1 Vpp, bar test pattern :

Colour, contrast and brightness at mid-position, sound at minimum.
Programme selected : PR 01.

DC voltages measured between the point and earth using a digital voltmeter.

RECEPTEUR : En UHF, niveau d'entrée 1 mV mire de barres
- SECAM, Norm L, Blanc 100%.

Par la prise Péritélévision, niveau d'entrée 1 Vcc, mire de barres .

Couleur, contraste, lumière à mi-course, son minimum.
Programme affecté PR 01.

Tensions continues relevées par rapport à la masse avec un voltmètre numérique.

EMPFÄNGER : Bei UHF Eingangspegel 1 mV, Farbbalken :
- PAL, Norm G, Weiss 100%.

Über die Scartbuchse : Eingangspegel 1 Vss, Farbbalken :

Farbe, Kontrast, Helligkeit in der Mitte des Bereichs, Ton auf Minimum.
Zugeordnetes Programm PR 01.

Gleichspannungen mit einem digitalen Voltmeter zur Masse gemessen.

RICEVITORE : In UHF, livello d'entrata 1 mV, monoscopio per barre :
- PAL, norma G, bianco 100%.

Per la presa SCART, livello d'entrata 1 Vcc, monoscopio per barre :

Colore, Contrasto, Luce a metà corsa, Suono minimo.
Programma designato PR 01.

Tensioni continue rilevate rispetto alla massa con un voltametro numerico.

RECEPTOR : En UHF, nivel de entrada 1 mV, mira de barras :
- PAL, norma G, blanco 100%.

Por la toma Peritelevision, nivel de entrada 1 Vpp mira de barra.

Color, Contraste, luz a mitad de carrera, Sonido mínimo.
Programa afectado PR 01.

Tensiones continuas marcadas en relacion a la masa con un voltimetro ligital.

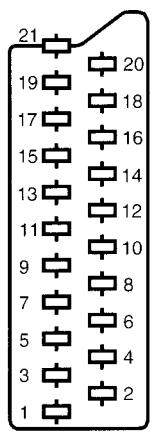

NOTE : (MAIN) ... etc. identifies each pcb module.

NOTE : (MAIN) ... etc. repères des platines constituant l'appareil.

HINWEIS : (MAIN) ...usw. Kennzeichnung der Platinen, aus denen das Gerät zusammengesetzt ist.

NOTA : (MAIN) ... ecc. indicazioni delle piastre che costituiscono l'apparecchio.

NOTA : (MAIN) ... etc. marcas de las placas que constituyen el aparato.

		ENGLISH	FRANÇAIS	DEUTSCH	ITALIANO	ESPANÕL
1	⊖→	AUDIO "R"	AUDIO "D"	AUDIO "R"	AUDIO "D"	AUDIO "D"
2	→⊕	AUDIO "R"	AUDIO "D"	AUDIO "R"	AUDIO "D"	AUDIO "D"
3	⊖→	AUDIO "L"	AUDIO "G"	AUDIO "L"	AUDIO "S"	AUDIO "I"
4	—	AUDIO	AUDIO	AUDIO	AUDIO	AUDIO
5	—	" BLUE "	" BLEU "	"BLAU"	"BLU"	"AZUL"
6	→⊕	AUDIO "L" MONO	AUDIO "G" MONO	AUDIO "L" MONO	AUDIO "S" MONO	AUDIO "I" MONO
7	→⊕	" BLUE "	" BLEU "	"BLAU"	BLU	AZUL
8	→⊕	SLOW SWITCH	COMMUT. LENTE	AV UMSCHALTUNG	"COMMUTAZIONE LENTA"	"CONMUTACION LENTA"
9	—	" GREEN "	"VERT"	"GRÜN"	"VERDE"	"VERDE"
10	NC					
11	→⊕	" GREEN "	"VERT""	"GRÜN"	"VERDE"	"VERDE"
12	NC					
13	—	" RED "	"ROUGE"	"ROT"	"ROSSO"	"ROJA"
14	NC					
15	→⊕	" RED "	"ROUGE"	"ROT"	"ROSSO"	"ROJA"
16	→⊕	FAST SWITCH	COMMUT. RAPIDE	AUSTASTUNG	"COMMUTAZIONE RAPIDA"	"CONMUTACION RAPIDA"
17	—	VIDEO	VIDEO	VIDEO	VIDEO	VIDEO
18	—	FAST SWITCH	COMMUT. RAPIDE	AUSTASTUNG	"COMMUTAZIONE RAPIDA"	"CONMUTACION RAPIDA"
19	⊖→	VIDEO	VIDEO	VIDEO	VIDEO	VIDEO
20	→⊕	VIDEO OR "SYNC"	VIDEO SYNCHRO	VIDEO ODER SYNCHRO	VIDEO O SINCRO	VIDEO O SINCRO
21	⊖→	PLUG SCREEN BOX	BLINDAGE PRISE	ABSCHIRMUNG DES STECKERS	ARMATURA DELLA SPINA	BLINDAJE DEL ENCHUFE

⊖→ : OUTPUT - SORTIE - AUSGANG - USCITA - SALIDA

→⊕ : INPUT - ENTRÉE - EINGANG - ENTRATA - ENTRADA

— : EARTH - MASSE - MASSE - MASSA - MASA

SERVICE POSITION - POSITION SERVICE - SERVICESTELLUNG
POSIZIONE SERVIZIO - POSICIÓN SERVICIO

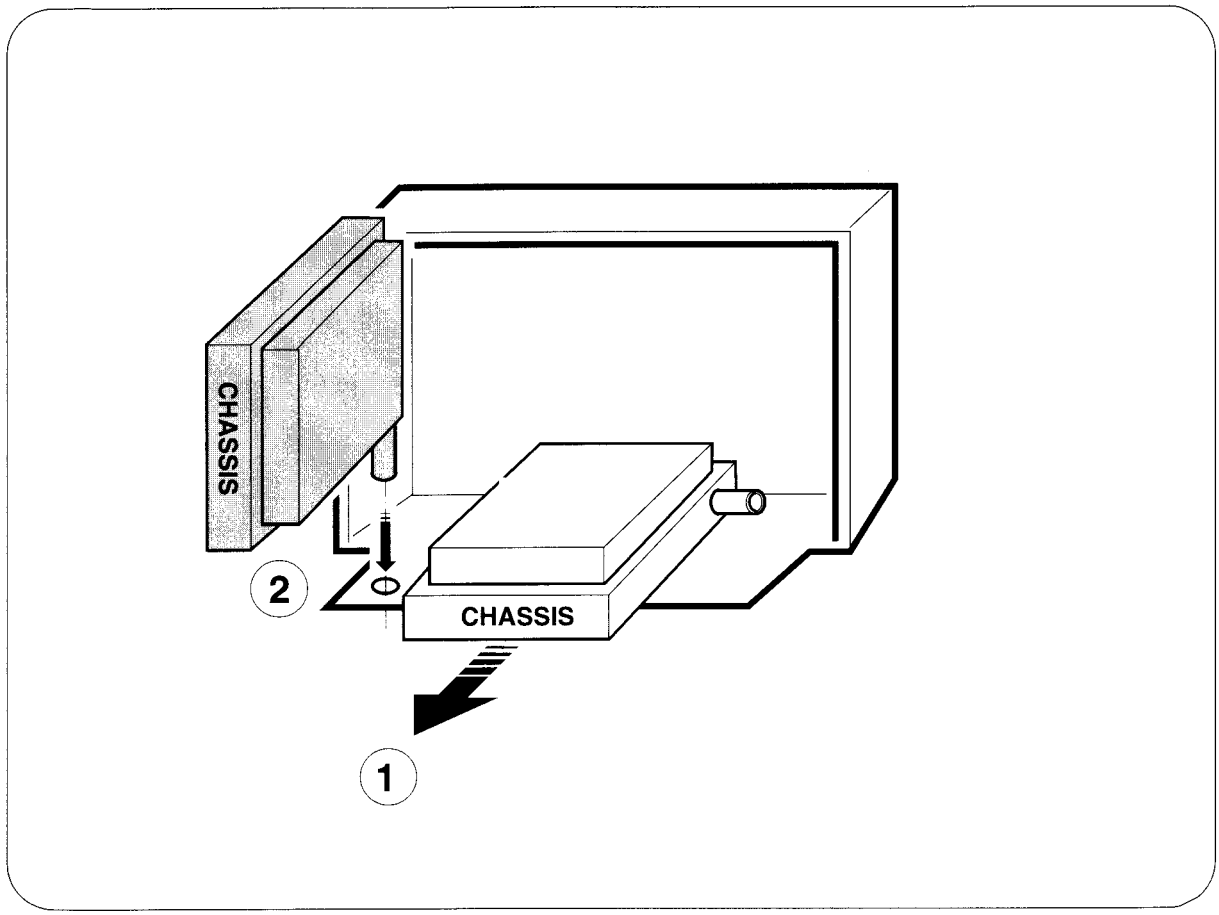

CONTROLS - EINSTELLER

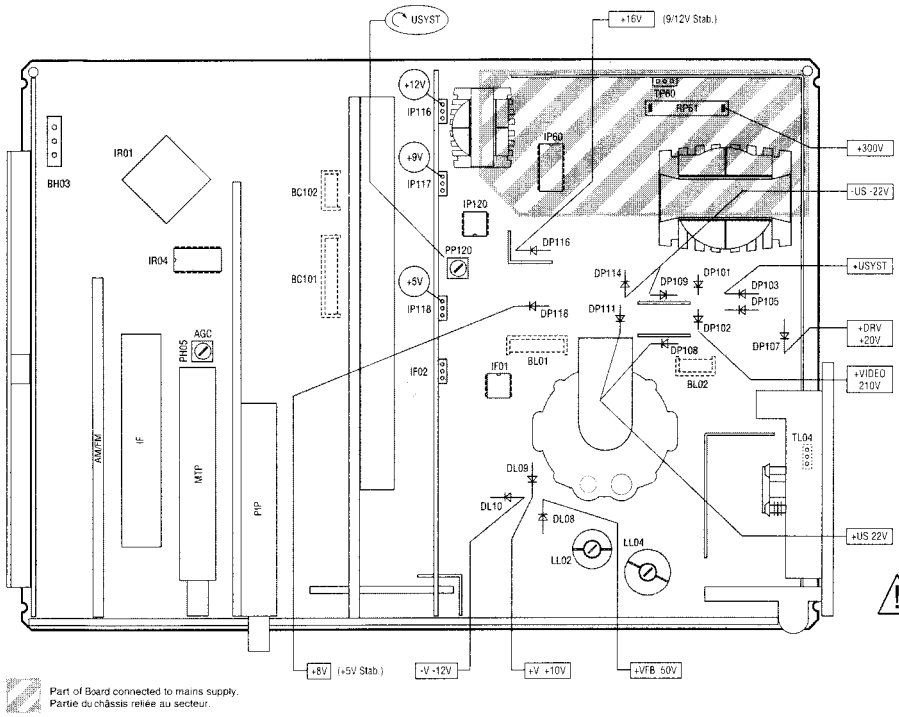

Part of Board connected to mains supply.
Partie du châssis reliée au secteur.

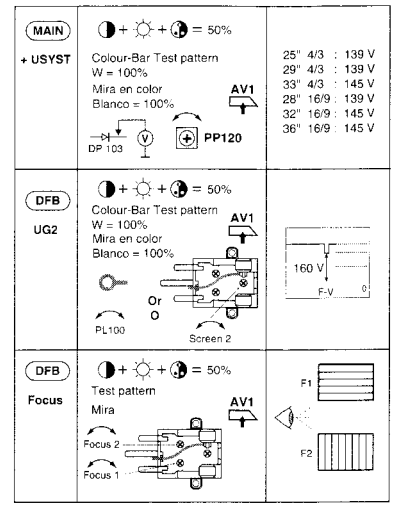

Do not disconnect modules when they are energized! Repairs on power supply section are to be carried out only with isolating transformer.

Module nicht bei eingeschaltetem Gerät entfernen ! Servicearbeiten am Netzteil nur unter Verwendung eines Regeltrenntrafos durchführen.

SERVICE MODE

I - ENTER/EXIT SERVICE MODE - EIN/AUSTIEG SERVICE MODE

1 ACCESSING SERVICE MODE

- Disconnect all SCART cables **Pin 8** ➠ **« Low » : OV**
- Set connected, indicator on, input signal HF

Remote Control Access	TV Control Panel Access
• Select Standby. • Turn off TV using **ON/OFF** button. • **Wait for indicator to go out completely.** • Press blue **TELETEXT** button on the remote control while turning on TV with the **ON/OFF** button.	• Turn off TV using **ON/OFF** button. • Press the **PR-** and **VOL-** buttons while turning on the TV with the **ON/OFF** button. • Hold down the **PR-** and the **VOL-** buttons .
Access SERVICE MODE.	**Access SERVICE MODE after T ≥ 8 seconds.**

TUBE	SETUP	VIDEO	GEOMETRY	PIP
V1.30-0	123456789ABCDEF.....OOOOOOOO			1234:56

Note :
In SERVICE MODE, the Lock function (PIN Number) is ignored and the child lock function is re-initialized.

2 TEMPORARY EXIT FROM SERVICE MODE

Remote Control Access	TV Control Panel Access
Use TV key	Use DISPLAY key
Re-enter **TELETEXT** key	Re-enter **INSTALLATION** key

3 EXIT FROM SERVICE MODE

Set TV into Standby or in OFF position using the **ON/OFF** button.

1 EINSTIEG IN DEN SERVICE MODE

- Alle Scartkabel abziehen **Pin 8** ➠ **« Low » : OV**
- Gerät eingeschaltet, Betriebsanzeige leuchtet, mit Signal am **HF**-Eingang.

Zugriff über die Fernbedienung	Zugriff über die Tastatur des Fernsehers
• Fernseher auf Stand-by schalten. • Fernseher über die **EIN/AUS** - Taste ausschalten. • Warten bis die Betriebsanzeige ganz aus ist. • Gleichzeitig die blaue **VIDEOTEXT** -Taste der Fernbedienung drücken und den Fernseher über die **EIN/AUS** -Taste einschalten.	• Fernseher über die **EIN/AUS** - Taste ausschalten. • Gleichzeitig die Tasten **PR -** und **VOL -** drücken und den TV über die **EIN/AUS**-Taste einschalten. • Die Tasten **PR -** und **VOL -** gedrückt halten.
Übergang in den SERVICE MODE	**Übergang in den SERVICE MODE nach T ≥ 8 s.**

TUBE	SETUP	VIDEO	GEOMETRY	PIP
V1.30-0	123456789ABCDEF.....OOOOOOOO			1234:56

Anmerkung :
Im SERVICE MODE wird die Sperrfunktion (PIN-Nummer) ignoriert und die Kindersicherung gelöscht (reinitialisiert).

2 VORÜBERGEHENDES VERLASSEN DES SERVICE MODE

Zugriff über die Fernbedienung	Zugriff über die Tastatur des Fernsehers
TV Taste drücken	DISPLAY Taste drücken
VIDEOTEXT Taste drücken	Taste **INSTALLATION** drücken

3 ENDGÜLTIGES VERLASSEN DES SERVICE MODE

Fernseher auf STAND-BY schalten oder mit der EIN/AUS-Taste ausschalten

II - NAVIGATION INSIDE THE SERVICE MODE - SUCHE IM SERVICE MODE

1 SELECTING A SETTING MENU

• Use **VOL+** or **VOL–** keys to select the appropriate setting: **"TUBE", "SET UP", "VIDEO", "GEOMETRY "** or **"PIP"**.

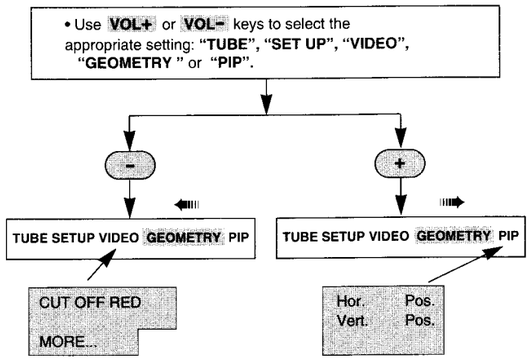

2 CHOOSING A SETTING FROM THE MENU

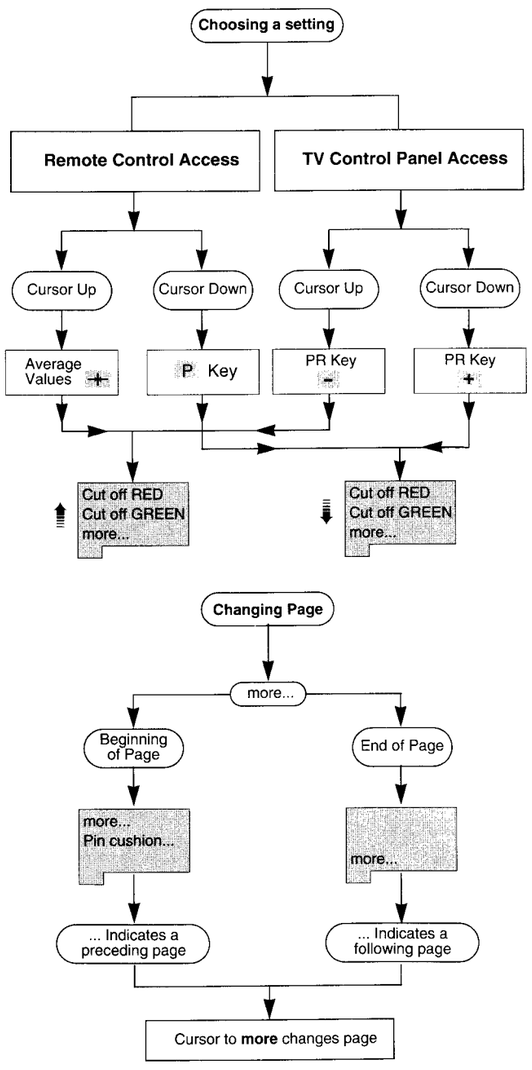

1 AUSWAHL EINES FUNKTIONSWAHL/MENÜS

• Die Tasten **VOL+** oder **VOL–** zur Auswahl der gewünschten Einstellung drücken : **"TUBE", "SET UP", "VIDEO", "GEOMETRY "** oder **"PIP"**.

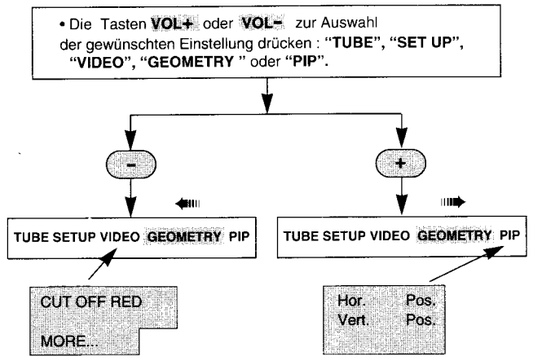

2 WAHL EINER EINSTELLUNG IN EINEM MENÜ

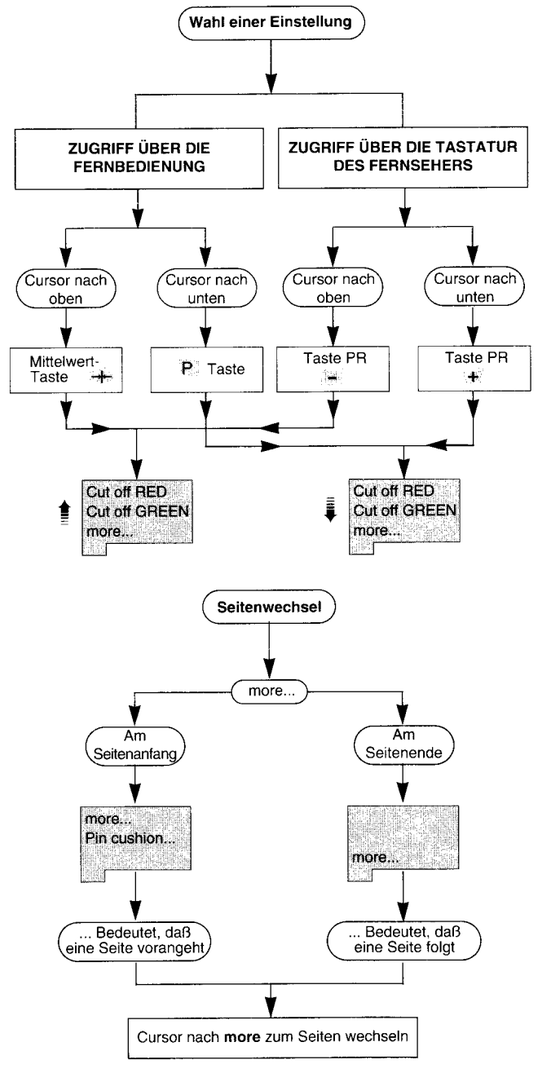

II - NAVIGATION INSIDE THE SERVICE MODE - FUNKTIONSWAHL IM SERVICE MODE

1 DISPLAYING THE VALUE OF THE SETTING

2 values are displayed

Example : V - AMP | (O) | 1F ← Hexadecimal value

Value stored in **NVM**

yes — Set value = **NVM** value — no

- yes → Displayed value ➡ (0)
- no → Display ➡ + > **NVM** value; ➡ – < **NVM** value

2 SETTING A VALUE

Remote Control Access		TV Control Panel Access	
VALUE ↗	Key +	VALUE ↗	Vol. button +
VALUE ↘	Key –	VALUE ↘	Vol. button –

3 WRITING - STORING VALUES IN MEMORY

After setting, the values are stored in NVM.
The display (see previous chapter) (0) or (+) or (-), refers to the value.
During alignment, values are temporarily stored in RAM.

Store ➡ Copies RAM value into NVM ➡ Equal values are indicated by **(0)**.

Note :
It is not possible to recall values stored in NVM before setting.

Restore ➡ copies all values from NVM into RAM. ➡ The value stored in NVM is recalled and can therefore be accessed if modified during the setting operation.

ROM Default ➡ All the default values of a page in use are stored in RAM.

Note :
It is possible to recall default values in order to carry out a test and later restore (RESTORE) NVM data. As long as STORE button is not pressed the data in NVM remains unchanged.

1 ANZEIGE DES EINSTELLUNGSWERTS

Zwei Werte werden angezeigt.

Beispiel : V - AMP | (O) | 1F ← Einstellungswert hexadezimal

Gespeicherter Wert in **NVM**

ja — Eingestellter Wert = **NVM**-Wert — nein

- ja → Angezeigter Wert ➡ (0)
- nein → Anzeige ➡ + > **NVM**-Wert; ➡ – < **NVM**-Wert

2 EINSTELLUNG EINES WERTS

Zugriff über die Fernbedienung		Zugriff über die Tastatur des Fernsehers	
WERT ↗	Taste +	WERT ↗	Taste Vol. +
WERT ↘	Taste –	WERT ↘	Taste Vol. –

3 SCHREIBEN - SPEICHERN DER WERTE

Nach dem Einstellen werden die Werte in NVM gespeichert.
Die Anzeige (siehe voriges Kapitel) (0) oder (+) bzw. (-) bezieht sich auf den Wert.
Während des Abgleichs werden die Werte vorübergehend im RAM gespeichert.

Store ➡ Kopieren des Werts von RAM nach NVM. ➡ Identische Werte werden durch (0) angezeigt.

Anmerkung :
Der vorher im NVM gespeicherte Wert wird überschrieben und kann nicht wieder aufgerufen werden.

Restore ➡ kopiert alle NVM-Datenwerte in den RAM. ➡ Der in NVM gespeicherte Wert wird aufgerufen und kann so wiedergefunden werden, wenn er beim Einstellen verändert wurde.

ROM Default ➡ Sämtliche Standardwerte der aktuellen Seite werden im RAM geladen.

Anmerkung :
Es ist möglich, die Standardwerte aufzurufen, um einen Test durchzuführen und später die NVM-Daten wieder herzustellen (über RESTORE).Solange STORE nicht ausgeführt ist, werden die NVM-Daten nicht verändert.

III - SOFTWARE CODE AND TV CONFIGURATION - SOFTWARE EINSTELLUNG UND GERÄTEKONFIGURATION

1 SERVICE MODE MENUS/TIME COUNTER

TUBE	SETUP	VIDEO	GEOMETRY	PIP
V1.30-0	123456789ABCDEF.....		000000 .DCSP	1234:56

Software version — Serial number — Receiver composition

The table below shows the relation between the characters used and the receiver composition.

D : Dolby Fitted
C : Contrast sensor detected
S : Sat. Fitted
P : PIP Fitted

1 SERVICE MODE MENÜS/ZÄHLER

TUBE	SETUP	VIDEO	GEOMETRY	PIP
V1.30-0	123456789ABCDEF.....		000000 .DCSP	1234:56

Software version — Serien-Nr. — Aufbau des Empfängers

In untenstehender Tabelle ist die Beziehung zwischen den verwendeten Zeichen und dem Aufbau des Empfängers dargestellt.

D : Dolby montiert
C : Kontrastsensor gefunden
S : Sat. montiert
P : PIP montiert

Tube type 0
Default tube type (+)

The "TUBE" menu is used
tube fitted to the chassis to
if NVM is replaced or becom

It performs a pre-setting by c

***The ICC11** chassis takes*

Tube Type 0 ➡ 1 ➡ 2 ➡ 3 ➡ 4 ➡ 5 ➡ • ➡ 15

1) - Select a tube type fo
2) - Enter **Default Tube**

Default tube type (+)

flashing — no

yes

Press + ➡ default values of **NVM**.

Note :
Calling default tube type
possible to restore the old

Das Menü "TUBE" ermöglich
Fernsehgerät ausgerüstet i
"Fehleinstellung" des NVM
Minimum zu reduzieren.
Es führt eine Voreinstellung
geändert werden.

Das **ICC11** Chassis unter

Tube Type 0 ➡ 1 ➡ 2 ➡ 3 ➡ 4 ➡ 5 ➡ • ➡ 15

1) - Den Röhrentyp wäh
ausgerüstet ist
2) - In ***Default Tube Typ***

Default tube type (+)

blinkt — nein

ja

Auf + ➡ drücken Standardwerte in **NVM**.

Hinweis :
Wenn " default tube t
überschrieben und es is
wieder herzustellen.

TUBE | SETUP | VIDEO | GEOMETRY | PIP

TUBE

Tube type	0
Default tube type (+)	

The "TUBE" menu is used to reduce TV alignment for a specific tube fitted to the chassis to a minimum, TV alignment is necessary if NVM is replaced or becomes "corrupted".

It performs a pre-setting by changing the default values of the NVM.

***The ICC11** chassis takes 16 different tube types*

Tube Type			
	0 ➡	29" SF	4/3
	1 ➡	32" MP	16/9
	2 ➡	25" SF	4/3
	3 ➡	28" MP	4/3
	4 ➡	28" SF	16/9
	5 ➡	32" SF	16/9
	•		
	15	Future possibilities	

1) - Select a tube type for the chassis.
2) - Enter **Default Tube Type (+)**.

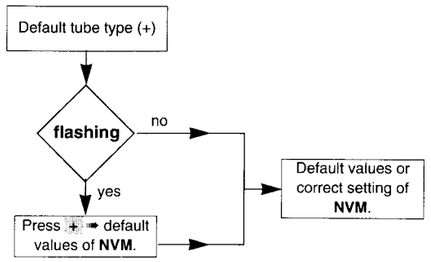

Note :
Calling default tube type overwrites the NVM and it is not possible to restore the old content !

Das Menü "TUBE" ermöglicht bei einer speziellen Röhre, mit der das Fernsehgerät ausgerüstet ist, im Falle des Austauschs oder einer "Fehleinstellung" des NVM das Abgleichen des Fernsehers auf ein Minimum zu reduzieren.
Es führt eine Voreinstellung durch, indem die Standardwerte im NVM geändert werden.

Das **ICC11** Chassis unterstützt 16 verschiedene Röhrentypen

Tube Type			
	0 ➡	29"	4/3
	1 ➡	32"	16/9
	2 ➡	25"	4/3
	3 ➡	28" MP	4/3
	4 ➡	28" SF	16/9
	5 ➡	32" SF	16/9
	•		
	15	Demnächst verfügbar	

1) - Den Röhrentyp wählen, mit dem der Fernseher ausgerüstet ist
*2) - In **Default Tube Type (+)** gehen*

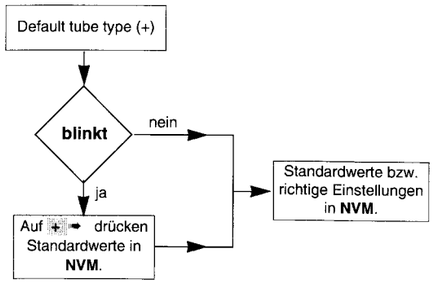

Hinweis :
Wenn " default tube type" aufgerufen wird, wird NVM überschrieben und es ist nicht möglich, den alten Zustand wieder herzustellen.

SETUP

First Page

Telef. Combi.	**DISABLED**	ENABLED
Lock feature	**DISABLED**	ENABLED
NICAM from Canal + Decoder	**NO**	YES
Clear Programs (+) Long Press !		
Text Enable	NONE FLOF TOP	**BOTH**
Text Language	1	
More ...		

Second Page

More ...			
Secam Text Line 16	ENABLED		**DISABLED**
AV3	**YES**	NO	
AV2-RGB Module	**YES**	NO	
WSS Processing	**NO**	YES	
Store	(+)		
Restore	(+)		
Rom Default	(+)		

- **Telef. Combi** Enable THOMSON remote control code only for TFK sets.
- **Lock Feature**
  DISABLED : "Lock" option inactive.
  ENABLED : "Lock" option active in P menu.
- **Clear Programme (+) Long Press !** :
  Clear all programmes stored in memory.
- **NICAM from Canal + Decoder**
  No : Disable } The special sound path handling for
  Yes : Enable } canal + on program location PRO 4.
- **Text Enable**
  Enables the teletext system:
  NONE → Normal text.
  FLOF → Normal text and Fastext (English, Spanish).
  TOP → Normal text and German teletext (TOP system).
  BOTH → Normal text and FLOF and TOP systems enables.
- **Text Language 1 (2,3,4 or 5).**
  Enables teletext to recognise and display relative characters from the following countries: (see opposite table)
- **Secam Text Line 16**
  DISABLED : -
  ENABLED : disturbance suppressed in Videotext
- **AV3** Yes : Available
  No : Not available.
- **AV2-RGB Module** Yes : Available
  No : Not available
  Feature available for Sat.TV only.
- **WSS Processing** No : Format is disabled
  (Only for 16/9) Yes : Format is enabled.

- **Telef. Combi** Kombifernbedienung für TELEFUNKEN TV zulassen
- **Lock Feature**
  DISABLED : Option "Sperren" nicht zugelassen im P menü.
  ENABLED : Option "Sperren" zugelassen.
- **Clear Programme (+) Long Press !** :
  Löschen aller gespeicherten Programme.
- **NICAM from Canal + Decoder**
  No : Disable } NICAM - Ton von einem Decoder
  Yes : Enable } zulassen (PR 04)
- **Text Enable**
  VT System zugelassen :
  NONE → Normal VT.
  FLOF → Normal VT und Fastext z.B. Spanien.
  TOP → Normal VT und deutscher TOP-VT..
  BOTH → Normal VT FLOF und TOP-VT zugelassen.
- **Text Language 1 (2,3,4 oder 5).**
  Ermöglicht dem VT die für die folgenden Länder entsprechenden Zeichen zu erkennen und anzuzeigen.
- **Secam Text Line 16**
  DISABLED : -
  ENABLED : Störungen werden im VT unterdrückt.
- **AV3** Yes : Vorhanden.
  No : Nicht vorhanden.
- **AV2-RGB Module** Yes : Vorhanden.
  No : Nicht vorhanden.
  Feature für SAT vorhanden : Nur TV.
- **WSS Processing** No : Format nicht zugelassen.
  (Nur 16/9) Yes : Format zugelassen.

➡ After setting ➡ **Store (+)**. ➡ Nach dem Einstellen ➡ **Store (+)**.

VIDEO

		DEFAULT VALUES SECAM	PAL
Seite 1			
Cutoff Red	(0) 1F	14	16
Cutoff Green	(0) 1F	14	16
Drive Red	(0) 1F	2A	24
Drive Green	(0) 1F	2A	24
Drive Blue	(0) 1F	20	18
Peak White	1F 1F 1F	2A 2A 20	24 24 18
more...			
Seite 2 more...			
Scale Brightn.	(0) 1F	20	20
Scale Contrast	(0) 1F	3A	3A
Scale Colour	(0) 1F	21	21
Text Contrast	(0) 1F	20	20
Store	(+)		
Restore	(+)		
Rom Default	(+)		

Page 1 video settings
Perform the G2 and the Focus settings beforehand.
Video-Einstellungen von Seite 1
Stellen Sie zuvor G2 und «Focus» ein.

Cutoff Red **Cutoff Green**	◑ + ☼ + ◑ = 50% Grey scale test pattern White 100% Grauwerte - Testbild Weiß 100%	Grey - Grau
Drive Red **Drive Green** **Drive Blue**	◑ + ☼ + ◑ = 50% Grey scale test pattern White 100% Grauwerte - Testbild Weiß 100%	White Weiß
Peak White	◑ = 100% ☼ + ◑ = 50% Grey scale test pattern White 100% Grauwerte - Testbild Weiß 100% CRT coll. TV12	F-H V = 100 Vpp

Page 2 video settings
Note :
Sets with ambient light detectors: the ambient light detector should be OFF in the Green menu (image).
Video-Einstellungen der Seite 2
Hinweis:
Mit Raumlichtdetektor ausgestattete Geräte. Der Raumlichtdetektor muss gesperrt sein: OFF im grünen Menü (Bild).

Scale Brightness	◑ = 100% ☼ + ◑ = 50% Grey scale test pattern White 100% Grauwerte - Testbild Weiß 100%	Black Schwarz
Scale Colour PAL **Scale Colour SECAM**	◑ + ☼ + ◑ = 50% SECAM PAL colour bar test pattern (75%) (then SECAM) Farbbalken in PAL (75%) (dann SECAM) BG2 CRT base TV13	F-H
Text Contrast	◑ + ☼ + ◑ = 50% Black test pattern White 100% Schwarz - Testbild Weiß 100% Digital mastering : «OFF» (menu ▤).	40V Blue Cathode
Scale Contast	Factory setting. Fixed PAL and SECAM values Werkseitige Einstellungswerte in PAL und SECAM festgelegt	Setting value **3 A**. Einstellungswert **3 A**.

➡ After setting ➡ **Store (+)**. ➡ Nach dem Einstellen ➡ **Store (+)**.

GEOMETRY

		DEFAULT VALUES 29"	32"
Vert. Pos	(0) 1F	03	03
Vert. Ampl.	(0) 1F	10	10
Vert. S-Corr.	(0) 1F	20	10
Hor. Pos.	(0) 1F	24	20
Hor. Ampl.	(0) 1F	33	2F
Hor. Delay	(0) 1F	20	20
more...			
more...			
Pincush. Corr.	(0) 1F	1B	0A
Pincush. Corner	(0) 1F	25	00
Trapezium	(0) 1F	03	03
EHT- Level Start	(+)		
Store	(+)		
Restore	(+)		
Rom Default	(+)		

Test Bar pattern used: 4/3 with geometric circle. Setting is done in 4/3 format and then checked in the format for the chassis tube.

Testbild: 4/3 mit Geometrie-Kreis. Der Abgleich erfolgt im Format 4/3 und wird im verwendeten Röhrenformat überprüft.

Vert. Pos.		
Vert. Amp.		
Vert. S Corr.		S
Hor. Pos.		
Hor. Amp.		

TUBE 4/3 **TUBE 16/9**

Display mode : 4/3
overscan :V = 107% - H = 107%

Display Mode : 4/3
overscan :V = 107% - H = 77%

Other display modes are automatically calculated.
Die anderen Anzeigemodi werden automatisch berechnet.

Hor. Delay		Use + and - to adapt the image + oder - drücken, um bidphase einzustellen
Pincush Corr.		
Pincush Corner		
Trapezium		

EHT - Level Start
The EHT protection circuit stops the TV if the EHT tension exceeds the specified limit. The difference between the SWITCH OFF point and the nominal value is constant.
***Setting : PAL colour bar test patterns.** Select EHT - Level Start and press The setting is optimised by the software.*

EHT - Level Start
Die Hochspannungs-Schutzschaltung schaltet den Fernseher aus, sobald die Spannung den vorgeschriebenen Grenzwert übersteigt Die Differenz zwischen dem Abschaltpunkt «Switch off point» und dem Nennwert ist konstant.
***Einstellung : Farbbalken PAL.** EHT - Level wählen und auf + drücken. Die Einstellung wird durch die Software optimiert.*

➡ After setting ➡ **Store (+)**. ➡ Nach dem Einstellen ➡ **Store (+)**.

PIP

Hor. Pos.	(0) 1F
Vert. Pos.	(0) 1F
Contrast	(0) 1F
Compare Main	MAIN PIP
More ...	
more...	
more...	
More ...	
Store	(+)
Restore	(+)
Rom Default	(+)

Hor. Pos.	◑ + ☼ + ◑ = 50% Colour bar test pattern	A (*) A = B B
Vert. Pos.	◑ + ☼ + ◑ = 50% Colour bar test pattern	(*)

(*) Center PIP image in the frame
(*) PIP -bild im fenster testbilds

Contrast	◑ + ☼ + ◑ = 50% Video pattern on AV1 (W = 100%) CRT 12	Y PIP picture = Y main picture Y PIP - bild = Y Hauptbild

➡ After setting ➡ **Store (+)**. ➡ Nach dem Einstellen ➡ **Store (+)**.

Broadcaster country code	Text Language 1	2	3	4	5
000	English	Polish	English (US)	English	
001	French	French	French	French	Slovakian
010	Swedish Finnish	Swedish Finnish	Swedish Finnish	Swedish Finnish	Hungarian
011	Czech Slovak	Czech Slovak	Czech Slovak	Turkish	Serbian Croatian Slovenian
100	German	German	German	German	Albanian
101	Spanish Portuguese		Spanish Portuguese	Spanish Portuguese	
110	Italian	Italian	Italian	Italian	
111					Rumanian

MAIN SCHEMATIC DIAGRAM - SCHEMA PLATINE PRINCIPALE - SCHALTUNG LEITERPLATTE KPL. - SCHEMA PIASTRA PRINCIPALE - ESQUEMA PLATINA PRINCIPAL

MAIN

■	BH001	BH002	JH901	JH902	JH903	JH905	JH906	JH907	JH908	JH915	JH916	JH928	CH014	RH009	RH030
HP 4001 00	MTP4015F	IF3343BG			X					X			120p	430R	-
HP 4003 00	MTP4015F	IF2349			X					X			120p	430R	680R
HP 4001 11	MTP4015F	IF3342			X					X			330p	180R	-
HP 4003 11	MTP4015F	IF3343LV3			X					X			120p	430R	-

Legend :
CVBS : Name of signal
(P) : Origin or destination

⚠ Indicates critical safety components, and identical components should be used for replacement.

Le remplacement des éléments de sécurité (repérés avec le symbole ⚠) par des composants non homologués selon la Norme CEI 65 entraine la non-conformité de l'appareil.
Dans ce cas, la responsabilité du 'abricant n'est plus engagée.

Wenn Sicherheitsteile (mit dem Symbol ⚠ gekennzeichnet) durch nicht normgerechte Teile ersetzt werden, erlischt die Haftung des Herstellers.

La sostituzione degli elementi di sicurezza (marchi con il segno ⚠) con componenti non omologati secondo la norma CEI 65 comporta la non conformità dell'apparecchio.
In tal caso é ' esclusa la 'responsabilita ' dei costruttore.

La subtitución de elementos de seguridad (marcados con el simbolo ⚠) por componentes no homologados segun la norma CEI 65, provoca la no conformidad del aparato.
En ese caso, el fabricante cesa de ser responsable.

– INSERTED
× NOT INSERTED

○	BP06	CP03	CP08	DP58	JP01 JP02	JP05	LP02	RP05	RP08	RP09	SP05	TP08
MIS 4001 00	–	–	–	–	×	×	–	25R	–	–	–	–
MIS 4002 00	×	–	×	×	×	–	–	18R	×	×	×	×
MIS 4001 00	–	×	–	–	–	×	×	25R	–	–	–	–
MIS 4002 00	×	×	×	×	–	–	×	18R	×	×	×	×

(R) RP 4000 11DM

(H) ■ HP 4---

BH02	2	3	4
LL'	0V	0V	0V
BG	5V	0V	5V
B1F	0V	11V	0V

ICC 11 △	CP026	CP108 CP109	CP116	DP041	IP116
BASIC STEREO	100p	470u/35v	4700u/25v	BA157	MC7812ACT
DM STEREO	100p	1000u/35v	4700u/16v	BA157	L4940-V12
SENSAR STEREO	220p	1000u/35v	4700u/16v	MUR115	L4940-V12
BASIC DOLBY	100p	1000u/25v	4700u/25v	BA157	L4940-V12
DM DOLBY	100p	1000u/25v	4700u/16v	BA157	L4940-V12
SENSAR DOLBY	100p	1000u/25v	4700u/16v	MUR115	L4940-V12

•••	UsysT	JL921	JL922	RL053
○	131V	×	–	30k1
	139V	–	×	40k2
	139V	×	–	40k2
	143V	–	×	44k2
	147V	–	×	48k7

Note :
During measurements in the power supply unit
- Use the primary power unit ground (Emit. TP060).

Attention :
Mesure dans le bloc alimentation
- Utiliser la masse du bloc alimentation (Emet. TP060).

Achtung :
Bei Messungen im Primärnetzteil
- Primärnetzteilmasse verwenden (Emit. TP060).

Attentionze :
misure nell'alimentatore primario
- usare massa alimentazione primario (Emet. TP060).

Cuidado :
Medida en el bloque de alimentacion
- Utilizar la masa del bloque de alimentacion (Emet. TP060).

Part of board connected to mains supply.
Partie du châssis reliée au secteur.
Primärseite des Netzteils.
Parte dello chàssis collegata alla rete.
Parte del chassis conectar a la red.

(P) PP 4001 11DM

QUEMA PLATINA PRINCIPAL

	RA007	RA008	CA013	CA014	CA017	CA018
AP 4000 11	2k2	2k2	470u	470u	470u	470u
AP 4001 11	3k9	3k9	470u	470u	470u	470u
AP 4000 11DM	2k2	2k2	1000u	1000u	1000u	1000u

ICC 11 △	CP026	CP108 CP109	CP116	DP041	IP116	IP110	RP021	RP120
BASIC STEREO	100p	470u/35v	4700u/25v	BA157	MC7812ACT	MC7805ACT	4R7	8K2
DM STEREO	100p	1000u/35v	4700u/16v	BA157	L4940-V12	MC7805ACT	4R7	2K2
SENSAR STEREO	220p	1000u/35v	4700u/16v	MUR115	L4940-V12	MC7805ACT	3R3	2K2
BASIC DOLBY	100p	1000u/25v	4700u/25v	BA157	L4940-V12	L4940-V51TH	4R7	2K2
DM DOLBY	100p	1000u/25v	4700u/16v	BA157	L4940-V12	L4940-V51TH	4R7	2K2
SENSAR DOLBY	100p	1000u/25v	4700u/16v	MUR115	L4940-V12	L4940-V51TH	3R3	2K2

***	UsysT	JL921	JL922	RL053
	131V	×	–	30k1
	139V	–	×	40k2
	139V	×	–	40k2
	143V	–	×	44k2
	147V	–	×	48k7

○ Fitted – not fitted	XP 4000 XP 4010 with PIP	XP 4001 XP 4011 wo PIP
A-JX912	○	–
A-JX913	○	–
A-JX914	○	–
B-JX908	–	○
B-RX009	–	○
B-RX010	–	○
B-RX011	–	○
C-JX945	–	–
C-JX947	–	–
C-JX948	–	–
X-RX002	○	○
X-RX003	○	○
X-RX006	○	○
X-RX007	○	○

(A) ▭ AP 4---

(Z) SP 4003 11DM

SP 4003 11 → SCI 4000 11
SP 4003 11DM → SCI 4000 00

(P) PP 4001 11DM

(X) XP 4000 00

(D) DP 4016 11DM

▲SUB VPROT 400

ICC 11
First issue 10 / 95

VIDEO AMPLIFIER - AMPLIFICATEURS VIDEO - VIDEOVERSTÄRKER - AMPLIFICATORE VIDEO - AMPLIFICADOR VIDEO

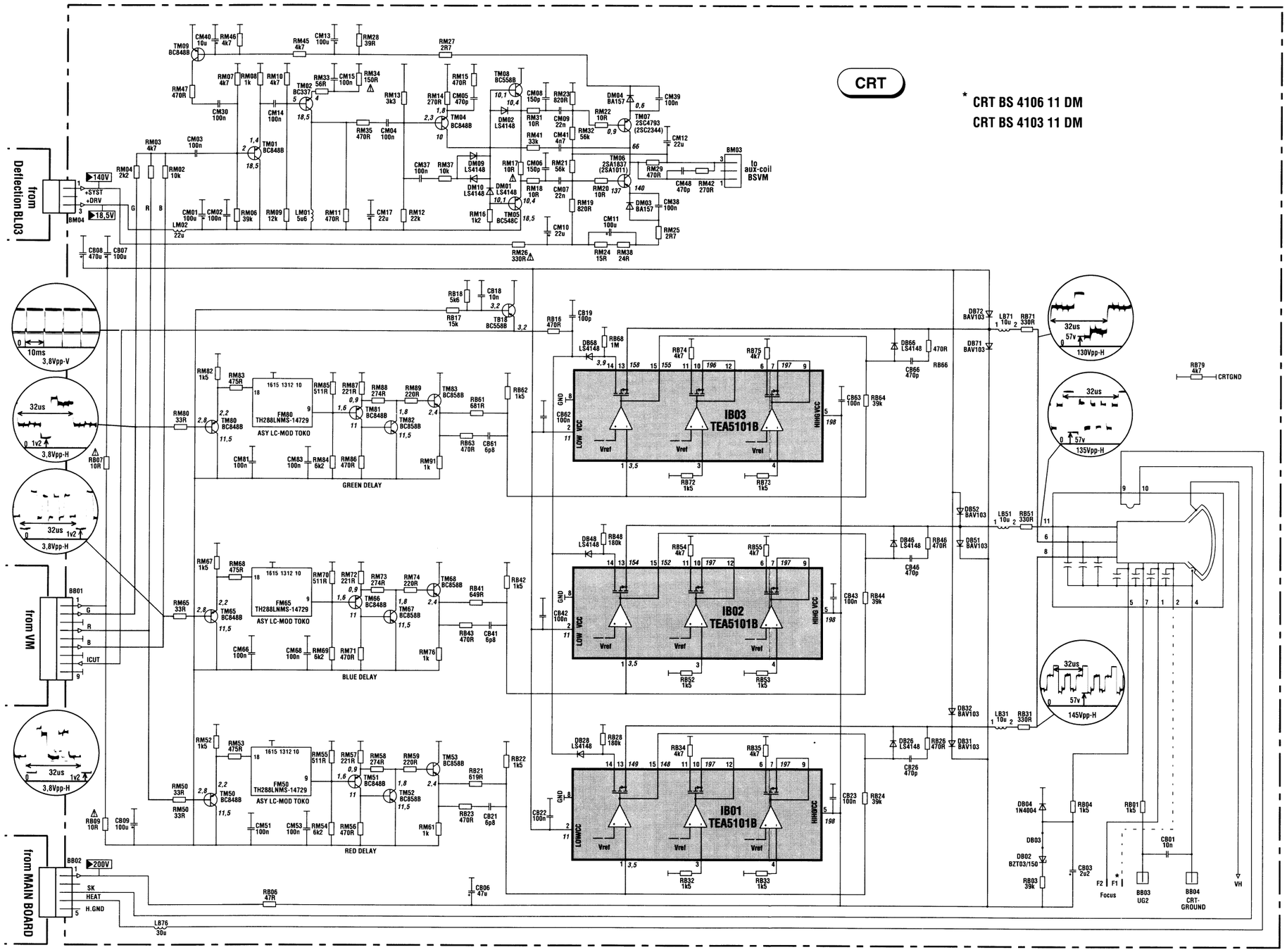

CRT

COMPONENT SIDE - COTE ELEMENTS - B

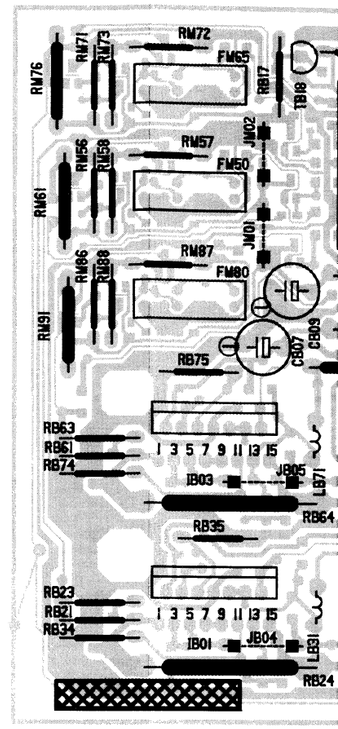

SOLDER SIDE - COTE CU

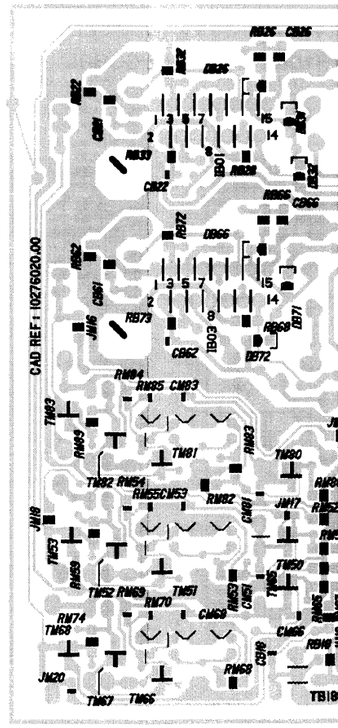

TÄRKER - AMPLIFICATORE VIDEO - AMPLIFICADOR VIDEO

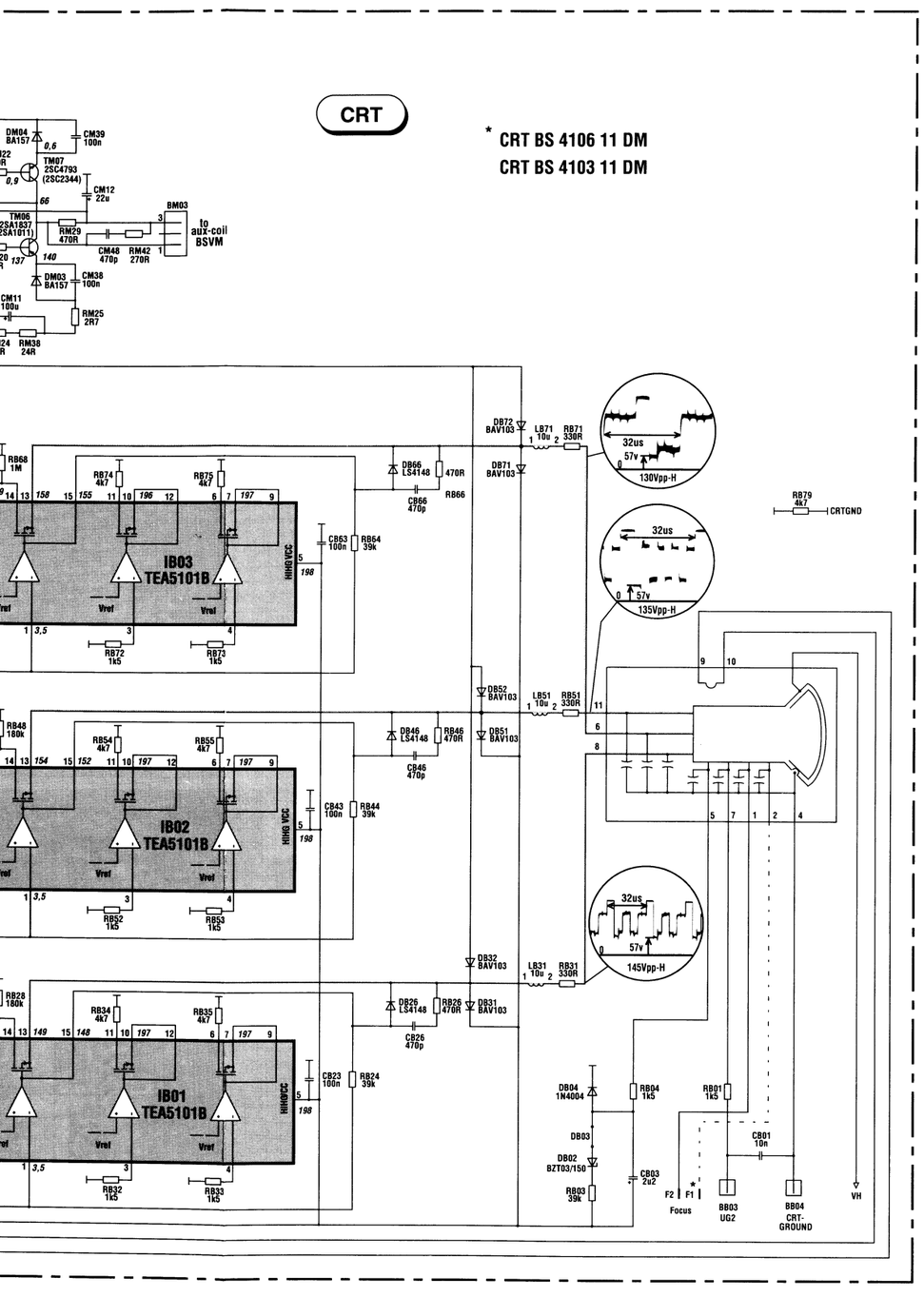

CRT BS 4100 - 01

COMPONENT SIDE - COTE ELEMENTS - BESTÜCKUNGSSEITE - LATO COMPONENTI - LADO COMPONENTES

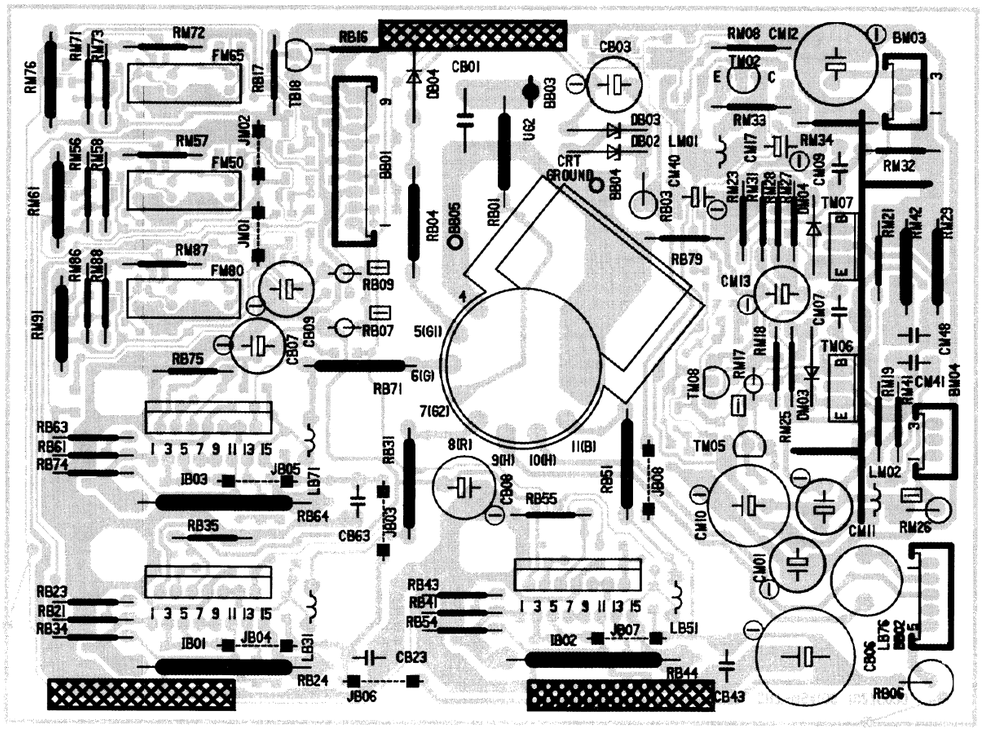

SOLDER SIDE - COTE CUIVRE - LÖTSEITE - LATO SALDATURE - LADO DEL COBRE

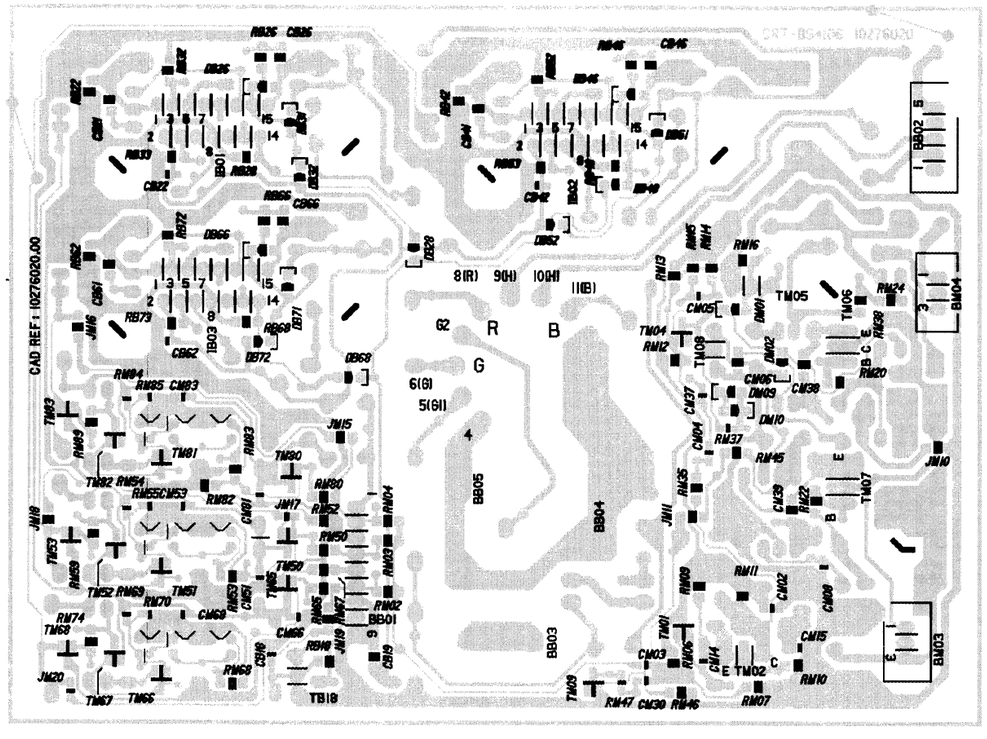

DYNAMIC FOCUS MODULE - MODULE FOCUS DYNAMIQUE- DYNAMIKFOKUS BAUSTEIN
MODULO FUOCO DINAMICO - MODULO FOCUS DINAMICO

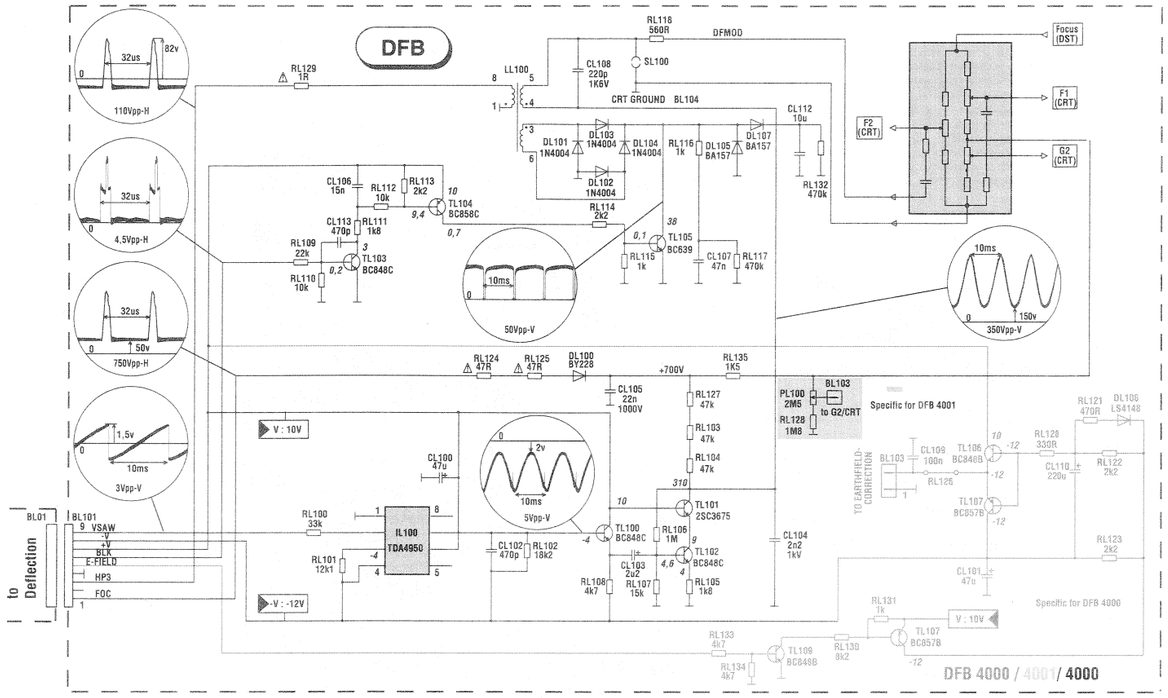

DFB 4000 - 02

COMPONENT SIDE - COTE ELEMENTS - BESTÜCKUNGSSEITE
LATO COMPONENTI - LADO COMPONENTES

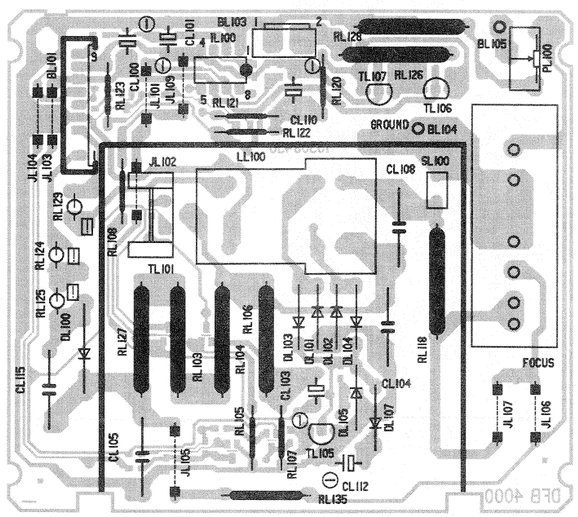

SOLDER SIDE - COTE CUIVRE - LÖTSEITE
LATO SALDATURE- LADO DEL COBRE

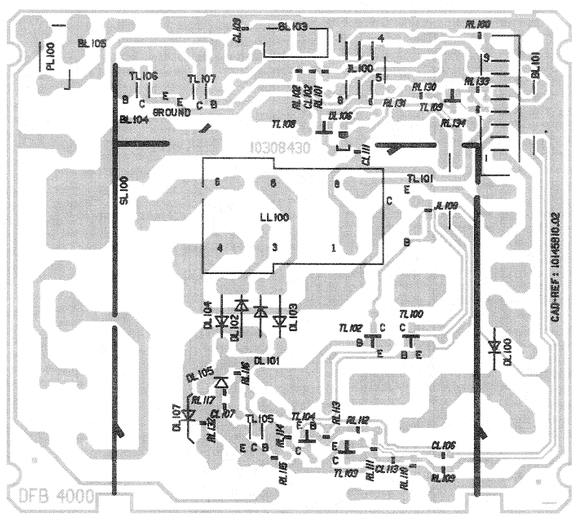

MAIN CIRCUIT BOARD - CIRCUITS IMPRIMES - GEDRUCKTE SCHALTUNG - CIRCUITI STAM

SOLDER SIDE - COTE CUIVRE - LÖTSEITE - LATO SALDATURE - LADO DEL COBRE

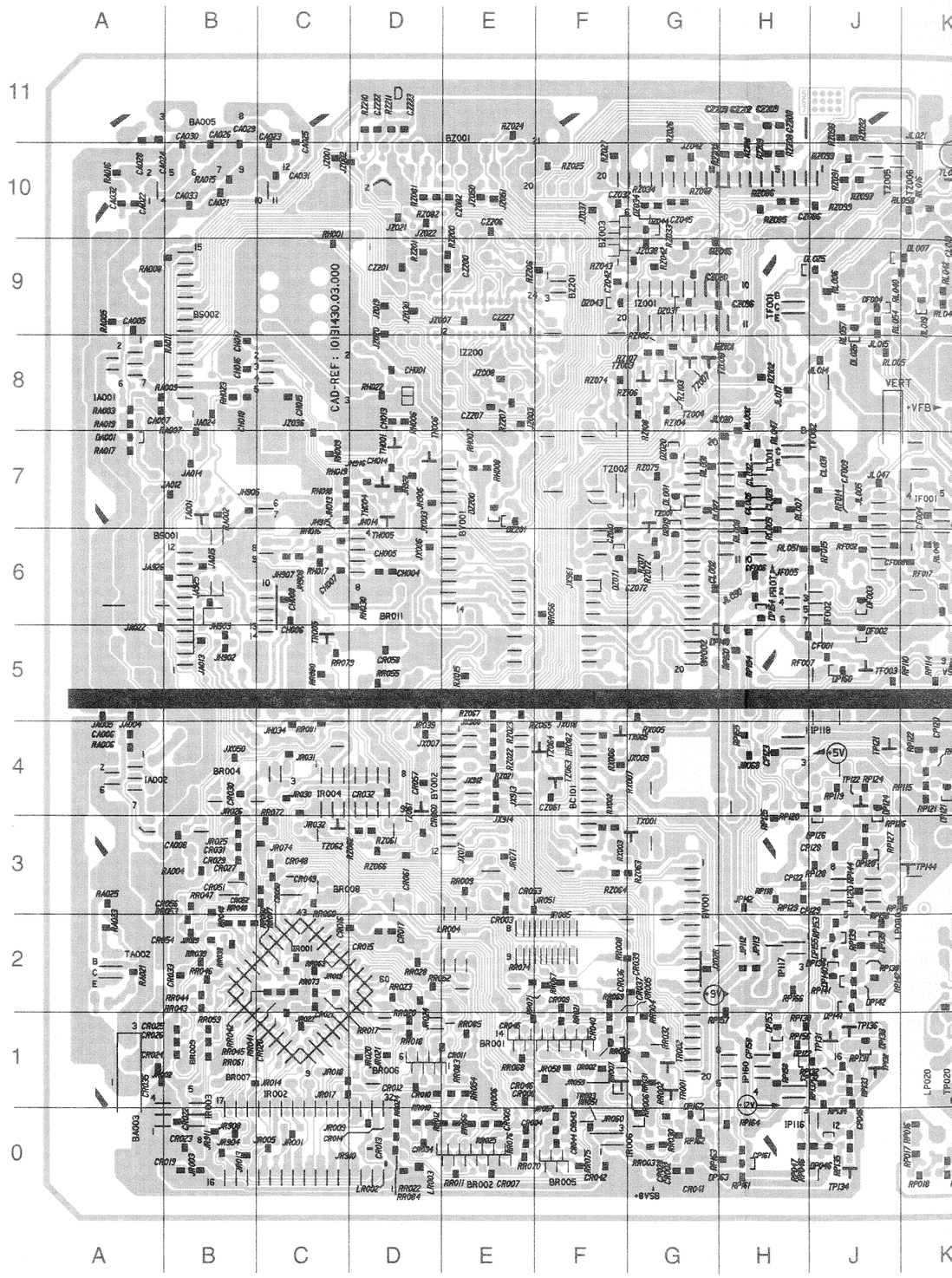

MIKFOKUS BAUSTEIN
AMICO

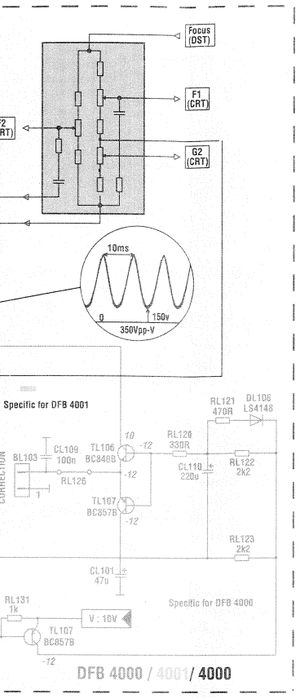

- COTE CUIVRE - LÖTSEITE
ATURE- LADO DEL COBRE

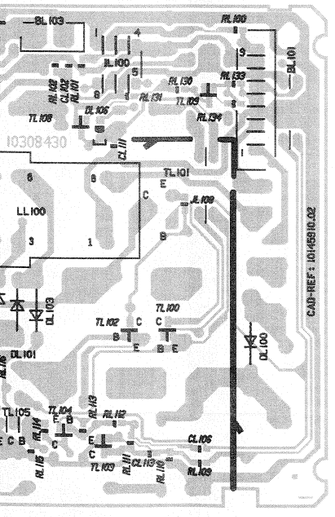

MAIN CIRCUIT BOARD - CIRCUITS IMPRIMES - GEDRUCKTE SCHALTUNG - CIRCUITI STAMPATI - CIRCUITOS IMPRESOS

SOLDER SIDE - COTE CUIVRE - LÖTSEITE - LATO SALDATURE - LADO DEL COBRE

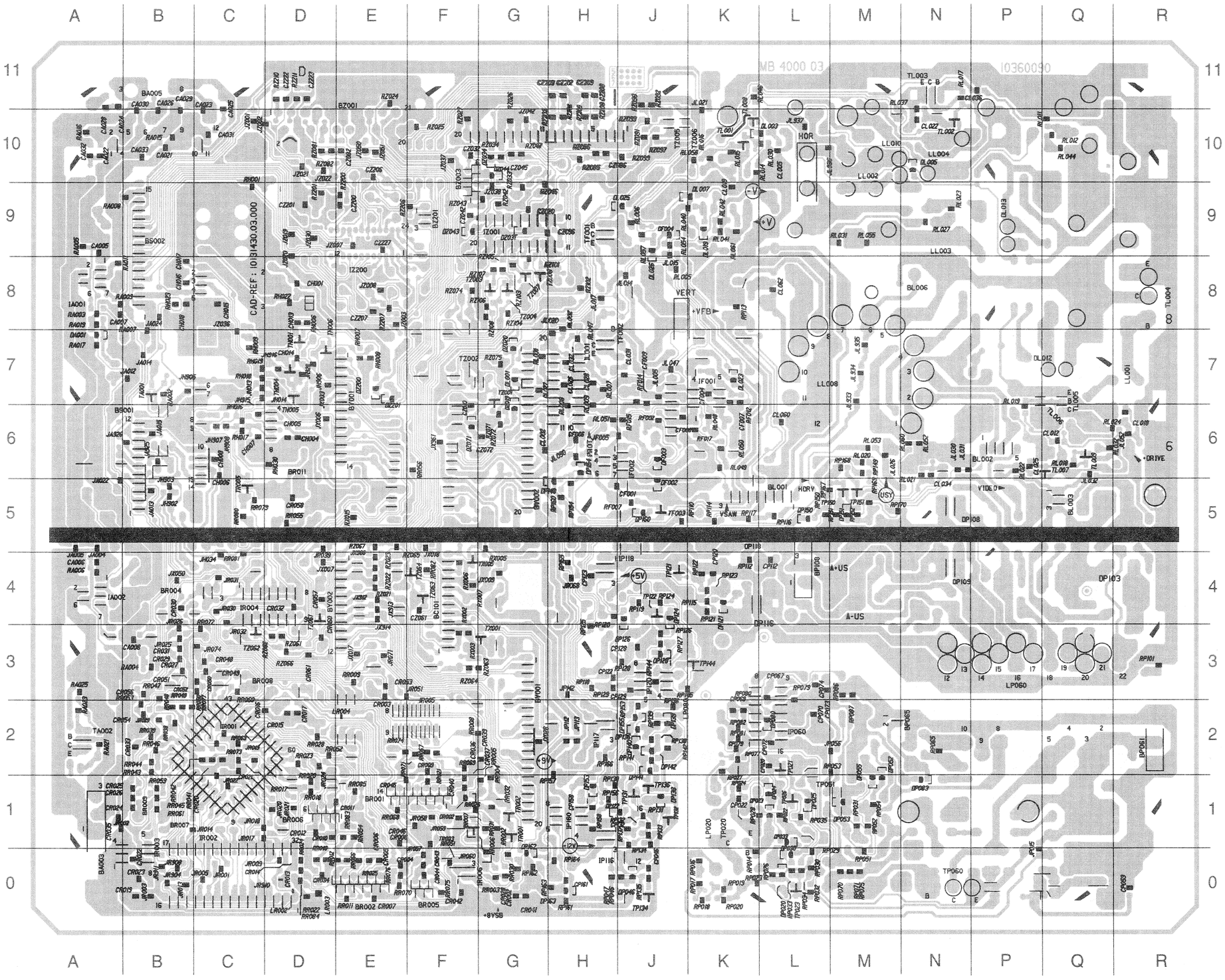

MAIN CIRCUIT BOARD - CIRCUITS IMPRIMES - GEDRUCKTE SCHALTUNG - CIRCUITI STAMPATI - CIRCUITOS IMPRESOS

COMPONENT SIDE - COTE ELEMENTS - BESTÜCKUNGSSEITE - LATO COMPONENTI - LADO COMPONENTES

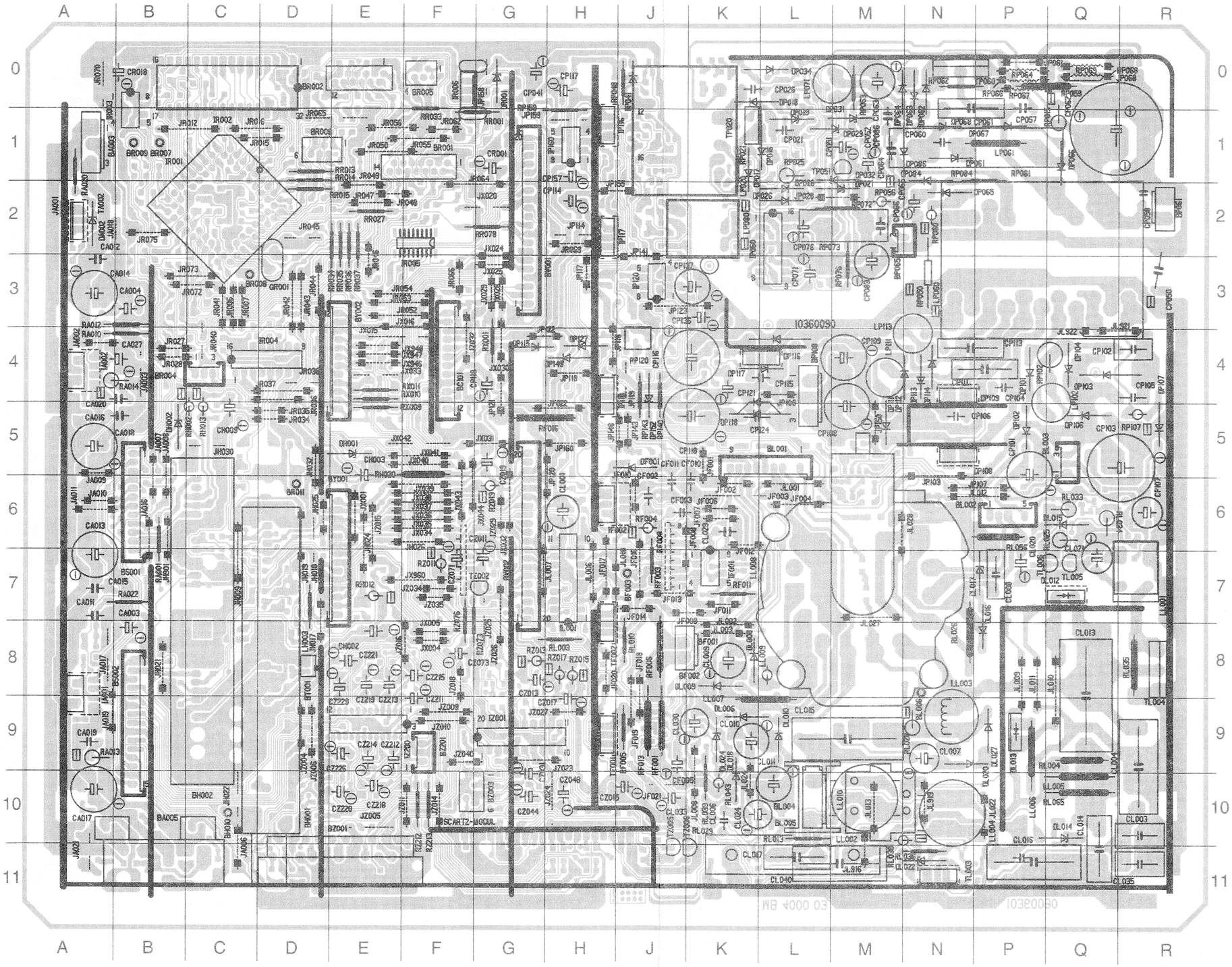

COMPONENTS LOCATION - LOCALISATION DES ELEMENTS - LAGE DER BAUTEILE
LOCALIZZAZIONE DEGLI ELEMENTI - LOCALIZACION DE LOS COMPONENTES

* SOLDER SIDE - COTE CUIVRE - LÖTSEITE - LATO SALDATURE - LADO DEL COBRE

1	2	3

BA003	A1
BA003*	A0
BA005	B10
BA005*	B11
BC101	F4
BC101*	F4
BF001	K8
BF002	J8
BF003	J7
BH001	D10
BH002	C10
BH010	C10
BL001	L5
BL001*	L5
BL002	N6
BL002*	P6
BL003	P5
BL003*	Q5
BL004	L10
BL005	L10
BL006	N9
BL006*	N8
BP061	R2
BP061*	R2
BP065	M3
BP065*	N2
BP108	L4
BP108*	L4
BR001	F1
BR001*	E1
BR002	D0
BR002*	E0
BR004	B4
BR004*	B4
BR005	F0
BR005*	F0
BR006	D1
BR006*	D1
BR007	B1
BR007*	B1
BR008	C3
BR008*	C3
BR009	B1
BR009*	B1
BR011	D6
BR011*	D6
BS001	B7
BS001*	B7
BS002	A8
BS002*	B9
BT001	D8
BV001	H3
BV001*	G3
BV002	G7
BV002*	G5
BY001	E6
BY001*	E7
BY002	E3
BY002*	D4
BZ001	E10
BZ001*	E11
BZ003	G10
BZ003*	F10
BZ201	F9
BZ201*	F9

CA003	B7
CA004	B3
CA005*	A9
CA006*	A4
CA007*	B8
CA008*	B3
CA011	A7
CA012	A2
CA013	A6
CA014	A3
CA015	A7
CA016	A5
CA017	A10
CA018	B5
CA019	A9

CA020	A4
CA021*	B10
CA022*	A10
CA023*	C11
CA024*	A11
CA025*	C11
CA026*	B11
CA027	B4
CA028*	A11
CA029*	B11
CA030*	B11
CA031*	C10
CA032*	A10
CA033*	B10
CF001	J5
CF001*	J5
CF002	J6
CF003	J6
CF004*	K7
CF005	J10
CF006*	H6
CF007*	K6
CF008*	J6
CF009*	J7
CF010	K5
CH001*	D8
CH002	E8
CH003	E5
CH004*	D6
CH005*	D6
CH006*	C6
CH007*	C6
CH008*	C6
CH009	C5
CH013*	D8
CH014*	D7
CH015*	C8
CH016*	B8
CH017*	B9
CH018*	B8
CL001	H6
CL002*	G6
CL003	R10
CL004	Q9
CL005*	L10
CL006	K10
CL007	N9
CL008	P7
CL009	K8
CL010	K9
CL011	L9
CL012*	Q6
CL013	Q8
CL014	Q10
CL015	L9
CL016	P10
CL017	K11
CL018*	R6
CL019*	K10
CL020	P6
CL021	Q6
CL022*	N10
CL024	K10
CL025*	P6
CL026*	H7
CL027*	G7
CL028*	H7
CL029	K6
CL030	J9
CL031*	J7
CL032*	H7
CL033	J10
CL034*	N6
CL035	R11
CL036*	N11
CL040	L11
CL060*	L6
CL062*	L8
CP020*	L2
CP021	L1
CP022*	K1
CP026	L0
CP041	G0
CP046*	J0
CP050	R3
CP051	L1
CP052	M1
CP057	P1

CP058	R2
CP059*	R0
CP060	N1
CP062	Q1
CP063	M0
CP064	M1
CP065	M2
CP066	M2
CP067*	L3
CP069*	K3
CP070*	L2
CP071	L3
CP072*	L2
CP073*	L3
CP074*	L3
CP076	L2
CP079*	K2
CP083	M3
CP086	M1
CP101	P5
CP102	Q4
CP103	Q5
CP104	P4
CP105	R4
CP106	N5
CP107	R6
CP108	L5
CP109	M4
CP111	N4
CP112*	L4
CP113	P4
CP114	H2
CP115	L4
CP116	J4
CP117	H0
CP118	K5
CP119	G4
CP120*	K4
CP121	K4
CP122*	H3
CP123*	H4
CP124	K5
CP128*	J3
CP129*	H3
CP132*	J1
CP136	J3
CP137	J3
CP157	H1
CP158*	H1
CP161*	H0
CR001	G1
CR002*	G0
CR003*	E3
CR004*	E0
CR005*	E0
CR006*	E1
CR007*	E0
CR008*	E1
CR009*	F2
CR010*	D1
CR011*	E1
CR012*	D1
CR013*	D0
CR014*	C0
CR015*	D2
CR016*	C2
CR017*	D2
CR018	B0
CR019*	B0
CR020*	C1
CR021*	C2
CR022*	B0
CR023*	B0
CR024*	A1
CR025*	A1
CR026*	A1
CR027*	B3
CR028*	G0
CR029*	B3
CR030*	B4
CR031*	B3
CR032*	D4
CR033*	B2
CR034*	D0
CR035*	A1
CR036*	F2
CR037*	G2
CR039*	G2

CR040*	F1
CR041*	G0
CR042*	F0
CR043*	F0
CR044*	F0
CR045*	E1
CR046*	E1
CR048*	C3
CR049*	C3
CR050*	C3
CR051*	B3
CR052*	B3
CR053*	E3
CR054*	B2
CR056*	B3
CR057*	D4
CR058*	D5
CR060*	D4
CR061*	D3
CZ010*	F7
CZ011	G6
CZ013	G8
CZ015	H10
CZ017	G9
CZ019	G6
CZ020*	G9
CZ031	G10
CZ032*	F10
CZ042*	F9
CZ044	G10
CZ045*	G10
CZ048	H10
CZ061*	F4
CZ071	F7
CZ072*	G6
CZ073	F8
CZ082*	E10
CZ086*	J10
CZ096*	H9
CZ200*	E9
CZ201*	D9
CZ202*	H11
CZ203*	H11
CZ206*	E10
CZ207*	E8
CZ208*	H11
CZ209*	H11
CZ211	F9
CZ212	E9
CZ213	E8
CZ214	E9
CZ215	F8
CZ218	E10
CZ219	E8
CZ220	E10
CZ221	E8
CZ222*	D11
CZ223*	D11
CZ226	E9
CZ227*	E9
CZ229	E8

DA001*	A8
DA002	A2
DF001	J5
DF002*	J6
DF003*	J6
DF004*	J9
DH001	E5
DH002	B5
DH024	E6
DL001*	G7
DL003*	L10
DL005*	N10
DL006	K9
DL007*	K10
DL008	K8
DL009	J8
DL010	L9
DL012	Q7
DL012*	Q7
DL013	P9
DL013*	P9

DL014	Q10
DL015	Q6
DL016	P7
DL017	N7
DL018	K9
DL019*	K9
DL020	P10
DL022	N11
DL023*	K7
DL024	K9
DL025*	J9
DL026*	J9
DL027	P9
DP016	L1
DP017	K2
DP018	L0
DP019	L1
DP020*	L0
DP021	M2
DP023*	L1
DP024*	L1
DP026	L2
DP028	L2
DP029	M1
DP030*	L0
DP031	M0
DP032	M1
DP033*	L1
DP034	L0
DP041	J0
DP046*	J0
DP052*	M2
DP053*	M1
DP055*	M2
DP061	N1
DP062	N0
DP063	N0
DP064	M0
DP065	N2
DP066	Q1
DP067	N1
DP068	N1
DP080*	L2
DP083*	N1
DP084	N1
DP086	N1
DP101	P4
DP102	P5
DP103	Q4
DP103*	R4
DP104	Q4
DP106	Q5
DP107	R4
DP108	N5
DP108*	N5
DP109	P4
DP109*	N4
DP111	M5
DP112	M5
DP113	N4
DP114	N4
DP115	G4
DP116	L4
DP116*	L4
DP117	K4
DP118	K5
DP118*	K5
DP121*	K4
DP122*	H1
DP124*	J4
DP126*	J3
DP127	H4
DP128*	J3
DP136*	J2
DP138*	J1
DP139*	J2
DP140*	J2
DP141*	J1
DP142*	J2
DP148*	H5
DP149	H4
DP150*	L5
DP151*	M5
DP152	J5
DP153*	H1
DP154*	H6
DP155*	J2
DP160*	J5

DP162*	G1
DP163*	G0
DR001	G0
DR002*	F1
DZ019*	G7
DZ020*	G7
DZ031*	G9
DZ043*	F9
DZ044*	G10
DZ071*	F6
DZ200*	E7
DZ201*	E7

FD001	H10

IA001	A8
IA001*	A8
IA002	A4
IA002*	A4
IF001	K7
IF001*	K7
IF002	H6
IF002*	J6
IL001	H8
IL001*	H7
IP060	K2
IP060*	L2
IP116	J1
IP116*	H0
IP117	H2
IP117*	H2
IP118	J4
IP118*	J4
IP120	J3
IP120*	J3
IP160	H1
IP160*	H1
IR001	B1
IR001*	C2
IR002	C1
IR002*	C1
IR003*	B1
IR004	D4
IR004*	C4
IR005	F3
IR005*	F3
IR006	F0
IR006*	G0
IZ001	G9
IZ001*	G9
IZ200	F9
IZ200*	E9

JA001	A2
JA002	A4
JA003	B4
JA004*	A5
JA005*	A5
JA006	C11
JA007	B5
JA008	B5
JA009	A5
JA010	A6
JA011	A6
JA012*	B7
JA013*	B5
JA014*	B7
JA015*	B6
JA016	B6
JA017	A8
JA018	A2
JA019	A9

JA021	A11
JA022*	A6
JA024*	B8
JA925*	B6
JA926*	B6
JF001	K5
JF002	K6
JF003	L6
JF004	L6
JF005*	H6
JF006	K6
JF007	K6
JF008	J7
JF008	K6
JF010	J5
JF011	K7
JF012	K6
JF013	J7
JF014	J7
JF016	J7
JF017	H7
JF018	J8
JF019	J9
JF020	H8
JF021	J10
JF022	H5
JH009	C7
JH013*	C7
JH014*	D7
JH017	D8
JH018	D7
JH019	D7
JH021	B8
JH022	C10
JH025	D6
JH026	F6
JH030	C5
JH032	D5
JH034*	C5
JH901	B7
JH902*	B5
JH903*	B6
JH905*	B7
JH906*	D7
JH907*	C6
JH908*	C6
JH915*	C7
JH916*	D7
JH928*	D7
JL001	L6
JL002	K8
JL003	K8
JL005*	J7
JL006	H7
JL007	H7
JL008	K10
JL009	P8
JL010	Q8
JL011	P8
JL012	N6
JL013	M10
JL014*	J8
JL015*	J9
JL017*	H8
JL018	J7
JL020*	H8
JL021*	K11
JL022	P10
JL024	K10
JL026*	M6
JL027	M7
JL028	M6
JL030*	N6
JL031*	N6
JL032*	Q6
JL047*	J7
JL050*	H6
JL052*	R6
JL916	M11
JL919	N10
JL921	Q4
JL922	Q4
JL933*	M7
JL934*	M7
JL935*	M7
JL936*	M10
JL937*	L11
JP015*	P0

JP028	L2
JP031	P0
JP056*	M2
JP068	Q0
JP103	N5
JP107	N6
JP108	L5
JP112*	H2
JP113*	H2
JP114	H2
JP116	H4
JP117	H3
JP118	H4
JP119	J4
JP120	H5
JP121	G5
JP122	G4
JP123	J3
JP141	J3
JP142*	H3
JP143	J5
JP148	H5
JP150	M5
JP155	H2
JP158	G0
JP159	G1
JP160	H5
JR001*	C0
JR002*	A1
JR003	A0
JR003*	B0
JR005*	C0
JR006	C3
JR007	C3
JR009*	C0
JR012	B1
JR013*	B0
JR014*	C1
JR015	C1
JR016	C1
JR017*	C1
JR018*	C1
JR019*	C2
JR020*	D1
JR021*	D1
JR022*	C1
JR024*	D1
JR025*	B3
JR026*	B4
JR027	B4
JR028	B4
JR029*	B2
JR030*	C4
JR031*	C4
JR032*	C4
JR034	D5
JR035	D5
JR036	D4
JR037	D4
JR038	D4
JR039*	D5
JR040	C4
JR041	C3
JR042	D3
JR043	D3
JR044	D3
JR045	D2
JR046	E3
JR047	E2
JR048	E2
JR049	E1
JR050	E1
JR051*	F3
JR052	E3
JR053	E3
JR054	E3
JR055	F1
JR056	E1
JR057*	F0
JR058*	F1
JR059*	F1
JR060*	F0
JR062	F1
JR063	H2
JR064	G1
JR065	D1
JR066	F3
JR068*	H4
JR070	A0
JR071*	E3
JR072	B3
JR073	B3
JR074*	C3
JR075	B2
JR904*	B0
JR908*	B0
JR910*	D0

JR911*	B0
JX001	E6
JX003*	D7
JX004	F8
JX005	F8
JX006*	D6
JX007*	D4
JX009*	G4
JX015	E4
JX016	E3
JX017*	E3
JX018*	F5
JX020	G2
JX024	G3
JX025	G3
JX026*	G2
JX028	G3
JX029	G3
JX030	G4
JX031	G5
JX032	G6
JX033	E4
JX034	F6
JX035	F6
JX036	F6
JX037	F6
JX038	F6
JX039	F6
JX040	F5
JX041	F5
JX042	E5
JX043	F6
JX044	G6
JX050*	B4
JX908*	E5
JX912*	E4
JX913*	E4
JX914*	E4
JX946	E4
JX947	E4
JX948	E4
JX960	F7
JX961*	F6
JZ001*	C11
JZ002*	C11
JZ003*	E8
JZ004	D9
JZ005	E10
JZ006	D9
JZ007*	E9
JZ008*	E8
JZ009	F9
JZ010	F9
JZ011	F10
JZ014	F10
JZ015	E6
JZ018	F8
JZ019*	D9
JZ020*	D9
JZ021*	D10
JZ022*	D10
JZ023	H10
JZ024	H10
JZ025	G8
JZ026	G8
JZ027	G9
JZ029	G6
JZ030*	D9
JZ032	F4
JZ034	F7
JZ035	F7
JZ036*	C8
JZ037*	F10
JZ038*	G10
JZ040	F9
JZ042*	G11
JZ050*	E10
JZ051*	E10

LH003	D8
LL001	R7
LL001*	R7
LL002	M10
LL002*	M10
LL003	N8
LL003*	N9
LL004	P10
LL004*	N10
LL005	Q10
LL006	P10

LL007	K9
LL008	K7
LL008*	M7
LL009	K8
LL010	M10
LL010*	M10
LP020	K2
LP020*	K1
LP060	N3
LP060*	P3
LP061	P1
LP071	L0
LP080	K2
LP080*	J3
LP102	Q4
LP111	M4
LP113	M4
LR002*	D0
LR003*	D0
LR004*	E2

PP120	J4

QR001	D3

RA001	B7
RA002*	B7
RA003*	A8
RA004*	B3
RA005*	A9
RA006*	A4
RA007*	B8
RA008*	B10
RA009*	B8
RA010	A4
RA011*	B9
RA012	A3
RA013	A9
RA014	B4
RA015*	B10
RA016*	A10
RA017*	A8
RA019*	A8
RA020	A1
RA021*	A2
RA022	B7
RA023*	A2
RA025*	A3
RF001	J9
RF002*	J6
RF003	J7
RF004	J6
RF005	J9
RF006	J8
RF007*	J5
RF008	J6
RF011	K7
RF012*	K6
RF013	J9
RF014*	J7
RF015*	J6
RF016	H5
RF017*	K6
RH001*	C10
RH002	B5
RH006*	D8
RH007*	E8
RH008*	E7
RH009*	C7
RH012	E7
RH013	C5
RH016*	C7
RH017*	C6
RH018*	C7
RH019*	C7
RH020	E5
RH022*	D8
RH023*	B8
RH030*	D6
RL001*	G7
RL002*	H8
RL003	H8
RL004	Q9

RL005*	J8
RL006*	J9
RL007*	H7
RL008*	H7
RL009*	H7
RL010	J8
RL011*	Q11
RL012*	Q10
RL013	L11
RL014*	K10
RL015*	K10
RL016*	K10
RL017*	N11
RL018*	Q6
RL019*	P7
RL020*	M6
RL021*	N6
RL022*	P6
RL023*	N9
RL024*	R6
RL025	P6
RL026	N8
RL027*	N9
RL028	M9
RL029	K10
RL030*	L10
RL031*	M9
RL032*	R6
RL033	Q6
RL034	Q6
RL035	R8
RL036	N11
RL037*	M11
RL038	M11
RL039	K10
RL040*	J9
RL041*	K9
RL042*	K9
RL043	K10
RL044*	Q10
RL046*	K11
RL047*	H8
RL048*	K6
RL049*	K6
RL050*	K6
RL051*	H6
RL052*	N6
RL053*	M6
RL054*	J9
RL055*	M9
RL056	P6
RL057*	J9
RL058*	K10
RL060*	N6
RL061*	K9
RL065	Q10
RP014*	K0
RP015	Q1
RP016*	K0
RP017*	K0
RP018*	K0
RP019*	K0
RP020*	K0
RP021	K1
RP022*	L1
RP023*	K0
RP024*	K1
RP025	L1
RP026*	L0
RP027*	K1
RP028*	K1
RP029*	L0
RP030*	L0
RP031*	M1
RP032*	L0
RP033*	L0
RP034*	L0
RP035*	L1
RP046*	H0
RP047*	H0
RP048	H0
RP050	N3
RP051*	M0
RP052*	M1
RP053*	M2
RP054*	M1
RP056	M2
RP059	Q0
RP060	N2
RP061	P1
RP062	N0
RP063	M0
RP064	P0
RP065*	N2
RP066	P0
RP067	P0
RP068	Q0

RP069	Q0
RP070*	M0
RP071*	M0
RP072	M2
RP073	L2
RP075*	M0
RP076	M3
RP077*	K2
RP079*	L3
RP080*	K3
RP081*	K2
RP082*	K2
RP084	N1
RP086*	M3
RP087*	M2
RP101*	R3
RP102	P4
RP107	R5
RP110*	K5
RP112*	K4
RP113*	K8
RP114*	K5
RP115*	K4
RP116*	L5
RP117*	K5
RP118*	H3
RP119*	J4
RP120*	H4
RP121*	K4
RP122*	K4
RP123*	K4
RP124*	J4
RP125*	H4
RP126*	J3
RP127*	J3
RP128*	J3
RP129*	H3
RP130*	H1
RP131*	J1
RP132*	J1
RP133*	J1
RP134*	J0
RP135*	J0
RP136*	J2
RP137*	J1
RP138*	J2
RP139*	J2
RP140	J5
RP141*	J2
RP142*	J2
RP143	J5
RP144*	J3
RP145*	J3
RP149*	M6
RP150*	L5
RP151*	M5
RP152*	M5
RP153*	J2
RP154*	H5
RP155*	H4
RP156*	H1
RP157*	H2
RP158*	H1
RP159	G1
RP160*	H5
RP161*	H0
RP162*	G0
RP163*	G0
RP164*	H0
RP166*	H2
RP167*	L5
RP168*	M6
RP169*	M6
RP170*	M5
RR001	G1
RR002*	G1
RR003*	G0
RR004*	G1
RR005*	G1
RR006*	G0
RR007*	F1
RR008*	F2
RR009*	E3
RR010*	D1
RR011*	E0
RR012*	D0
RR013	D1
RR014	D1
RR015	D2
RR017*	D1
RR018*	D1
RR020*	D1
RR021*	F1
RR022*	D0
RR023*	D2
RR024*	D1
RR025*	E0

RR026*	F1
RR027	E2
RR028*	D2
RR030*	G0
RR031*	G1
RR032*	G1
RR033	F1
RR034	E2
RR035	E2
RR036	E2
RR037	E2
RR038*	B2
RR039*	B2
RR041*	B1
RR042*	B1
RR043*	B2
RR044*	B2
RR045*	B1
RR046*	B2
RR047*	B3
RR048*	B3
RR049*	B3
RR050*	C3
RR051*	F1
RR052*	D2
RR053*	B3
RR054*	E1
RR055*	D5
RR056*	F6
RR058*	E1
RR059*	B1
RR060*	C3
RR061*	B1
RR063*	C2
RR066*	E0
RR067*	F2
RR069*	F2
RR070*	E0
RR071*	E2
RR072*	C4
RR073*	C2
RR074*	E2
RR075*	F0
RR076*	E0
RR077*	C3
RR078	G2
RR079*	C5
RR080*	C5
RR081*	C5
RR082*	F4
RR083*	E1
RR084*	D0
RR085*	E1
RX001	G4
RX002*	F4
RX003*	F3
RX005*	G5
RX006*	F4
RX007*	G4
RX009	E5
RX010	E4
RX011	E4
RX015*	E5
RZ011	F7
RZ013	G8
RZ015	H8
RZ017	H8
RZ019	G6
RZ021*	E4
RZ022*	E4
RZ023*	E5
RZ024*	E11
RZ025*	F10
RZ026*	G11
RZ027*	F11
RZ033*	G10
RZ034*	G10
RZ042*	G9
RZ043*	F9
RZ046*	H10
RZ047*	G10
RZ061*	D3
RZ062*	D3
RZ063*	G3
RZ064*	F3
RZ065*	F5
RZ066*	D3
RZ067*	E5
RZ071*	G6
RZ072*	G6
RZ073	G8
RZ074*	F8
RZ075*	G7
RZ076	F8
RZ081*	D10
RZ082*	D10
RZ085*	H10

RZ086*	H10
RZ091*	J10
RZ092*	J11
RZ093*	J11
RZ097*	J10
RZ098*	J11
RZ099*	J10
RZ101*	H9
RZ102*	H8
RZ103*	G8
RZ104*	G8
RZ105*	G9
RZ106*	G8
RZ107*	G8
RZ108*	G8
RZ200*	E10
RZ201*	D10
RZ202*	H11
RZ203*	H11
RZ206*	F9
RZ207*	E8
RZ208*	H11
RZ209*	H11
RZ210*	D11
RZ211*	D11
RZ212	F11
RZ213	F11

TA001*	B7
TA002	A2
TA002*	A2
TF001*	H9
TF002	H8
TF002*	J8
TF003*	J5
TH001*	D8
TH004*	D7
TH005*	D7
TH006*	D8
TL001*	K10
TL002*	N10
TL003	N11
TL003*	N11
TL004	R8
TL004*	R8
TL005	Q7
TL005*	Q7
TL006	P7
TL006*	Q6
TL007*	Q6
TL008*	K11
TL009*	Q6
TP020	K1
TP020*	K1
TP021*	L2
TP023*	L0
TP025*	L1
TP026*	L1
TP051	L1
TP051*	M1
TP060	P0
TP060*	N0
TP121*	J4
TP122*	J4
TP131*	J1
TP132*	J1
TP134*	J0
TP136*	J1
TP144*	K3
TP150*	M5
TP151*	M5
TR001*	G1
TR002*	G1
TR003*	F1
TR005*	C6
TX001*	G3
TX001*	G7
TX005*	G4
TZ002	G7
TZ002*	F7
TZ003*	F8
TZ005	J10
TZ005*	J10
TZ006	J10
TZ006*	K10
TZ007*	G8
TZ008*	G8
TZ061*	D4
TZ062*	C3
TZ063*	F4
TZ064*	F4

VIDEO MODULE - MODULE VIDEO - VIDEO BAUSTEIN - MODULO VIDEO - MÓDULO VIDEO

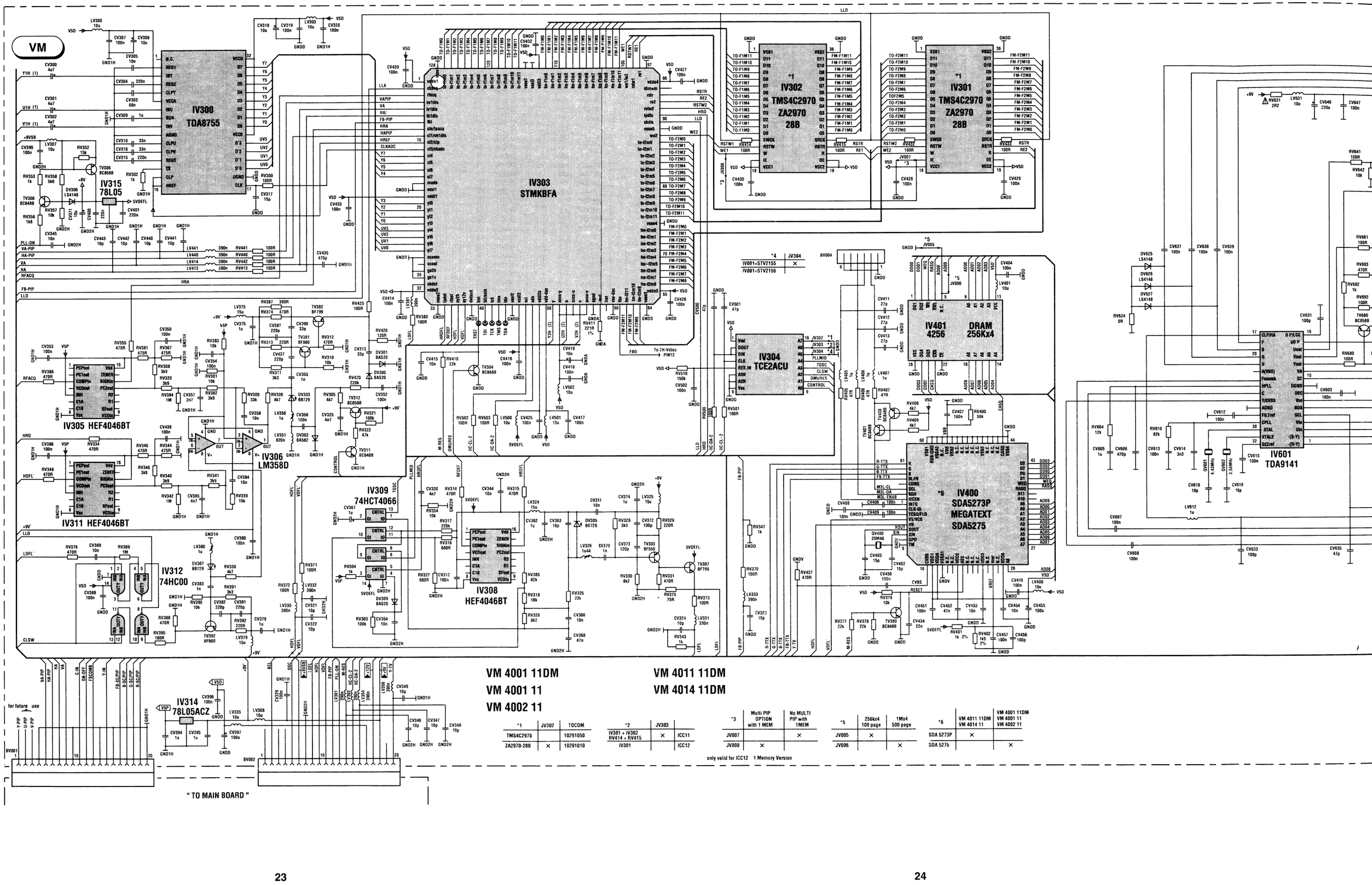

VM 4001 11DM
VM 4001 11
VM 4002 11

VM 4011 11DM
VM 4014 11DM

*1	JV302	TOCOM
TMS4C2970		10291050
ZA2970-28B	×	10291010

*2	JV303	
IV301 + IV302 RV414 + RV415	×	ICC11
IV301		ICC12

*3	Multi PIP OPTION with 1 MEM	No MULTI PIP with 1MEM
JV007		×
JV008	×	

only valid for ICC12 1 Memory Version

*5	256kx4 100 page	1Mx4 500 page
JV005	×	
JV006		×

*6	VM 4011 11DM VM 4014 11	VM 4001 11DM VM 4001 11 VM 4002 11
SDA 5273P	×	
SDA 5275		×

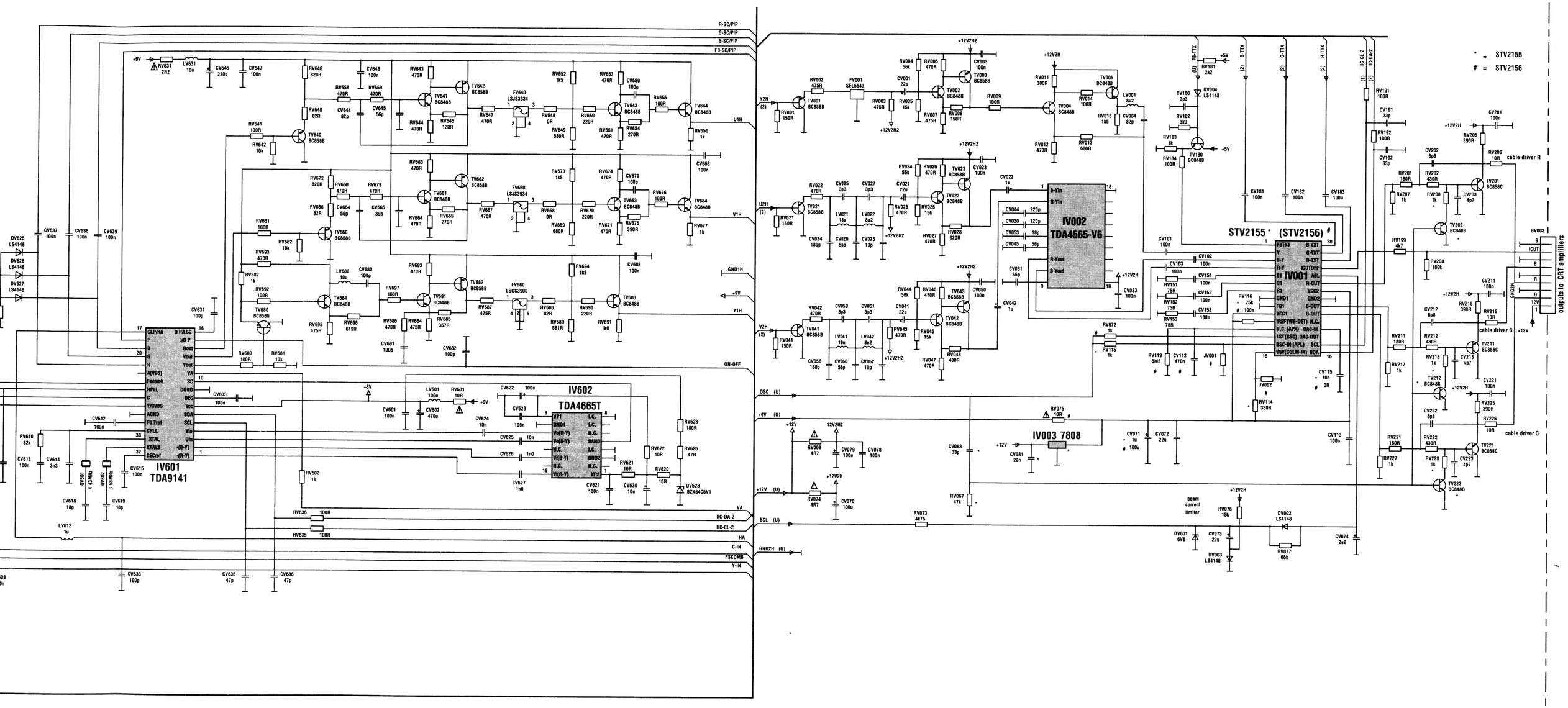
IV601
TDA9141
IV602
TDA4665T
IV002
TDA4565-V6
IV003 7808
STV2155 * (STV2156) #
IV001
R-SC/PIP
G-SC/PIP
B-SC/PIP
FB-SC/PIP
U1H
V1H
GND1H
+9V
Y1H
ON-OFF
VA
IIC-DA-2
IIC-CL-2
HA
C-IN
FSCOMB
Y-IN
DSC (U)
+9V (U)
+12V (U)
BCL (U)
GND2H (U)
cable driver R
cable driver B
cable driver G
outputs to CRT amplifiers
* = STV2155
# = STV2156

VIDEO MODULE - MODULE VIDEO - VIDEO BAUSTEIN - MODULO VIDEO - MÓDULO VIDEO

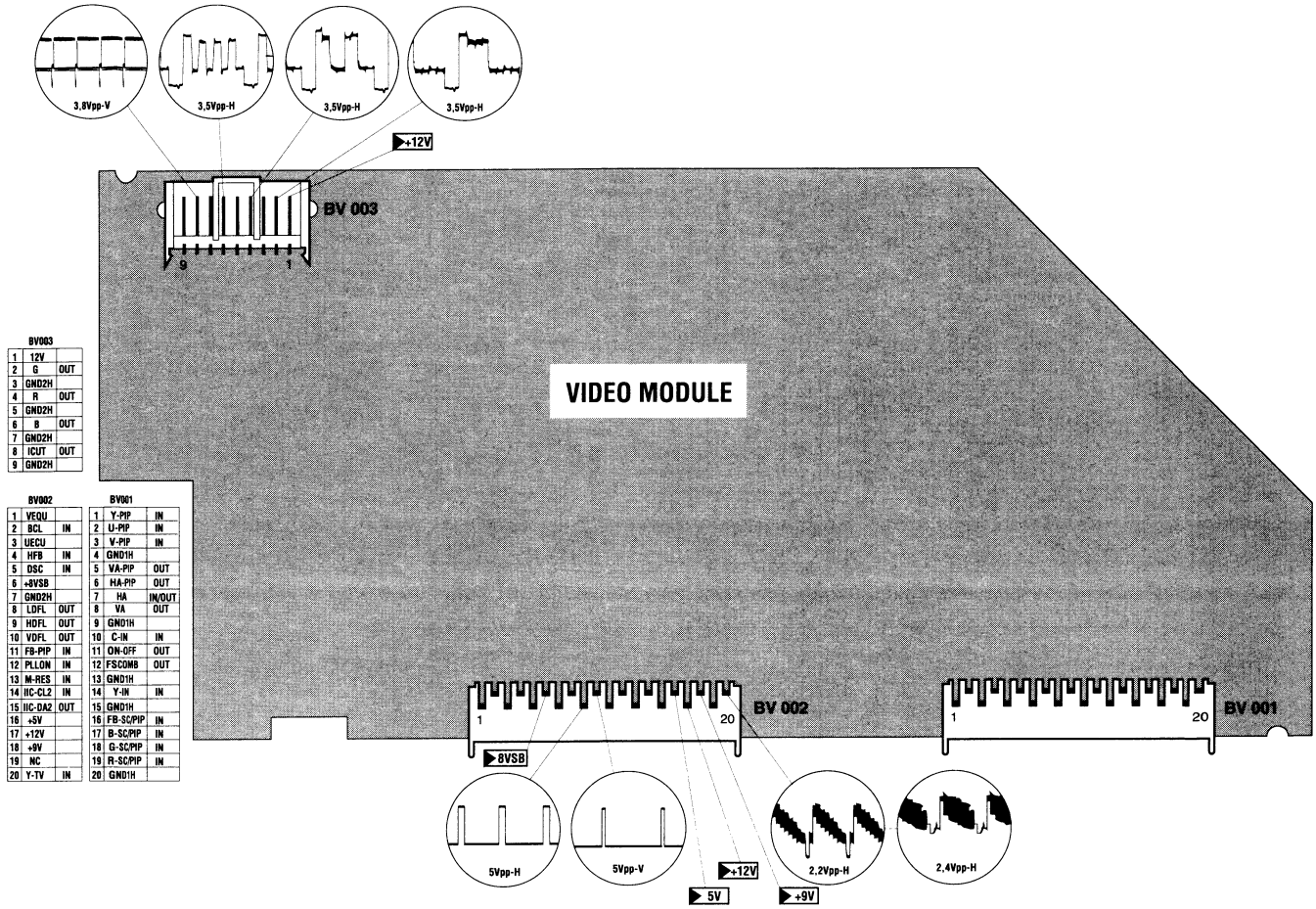

BV003

1	12V	
2	G	OUT
3	GND2H	
4	R	OUT
5	GND2H	
6	B	OUT
7	GND2H	
8	ICUT	OUT
9	GND2H	

BV002

1	VEQU	
2	BCL	IN
3	UECU	
4	HFB	IN
5	DSC	IN
6	+8VSB	
7	GND2H	
8	LDFL	OUT
9	HDFL	OUT
10	VDFL	OUT
11	FB-PIP	IN
12	PLLON	IN
13	M-RES	IN
14	IIC-CL2	IN
15	IIC-DA2	OUT
16	+5V	
17	+12V	
18	+9V	
19	NC	
20	Y-TV	IN

BV001

1	Y-PIP	IN
2	U-PIP	IN
3	V-PIP	IN
4	GND1H	
5	VA-PIP	OUT
6	HA-PIP	OUT
7	HA	IN/OUT
8	VA	OUT
9	GND1H	
10	C-IN	IN
11	ON-OFF	OUT
12	FSCOM8	OUT
13	GND1H	
14	Y-IN	IN
15	GND1H	
16	FB-SC/PIP	IN
17	B-SC/PIP	IN
18	G-SC/PIP	IN
19	R-SC/PIP	IN
20	GND1H	

INTEGRATED CIRCUITS AND TRANSISTORS OUTLINE - CIRCUITS INTEGRES ET TRANSISTORS
INTEGRIERTE SCHALTUNGEN UND TRANSISTOREN - CIRCUITI INTEGRATI E TRANSISTORS
CIRCUITOS INTEGRADOS Y TRANSISTORES

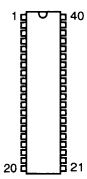

TDA 6812

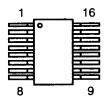

TDA 4661T

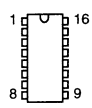

MC 78 L 08
MC 14094
TDA 4453
TEA 5114A
TEA 2261

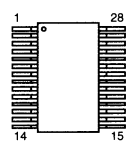

SDA 9187
SDA 9188

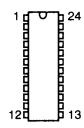

TEA 6422

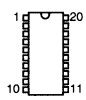

TDA 9151
TEA 6417

LM 393
MC 33076
TEA 2124
TEA 5170
TL 082

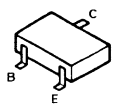

BC 848
BC 857
BC 858
BF 739
2 SC 3675

BF 422

MPS 750

BC 546
BC 337-40

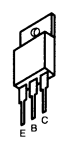

BF 883
BF 872
BF 423

BUT 1141F

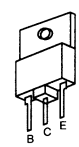

BUL 810TH

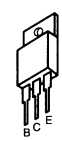

BD 242
BU 2525A

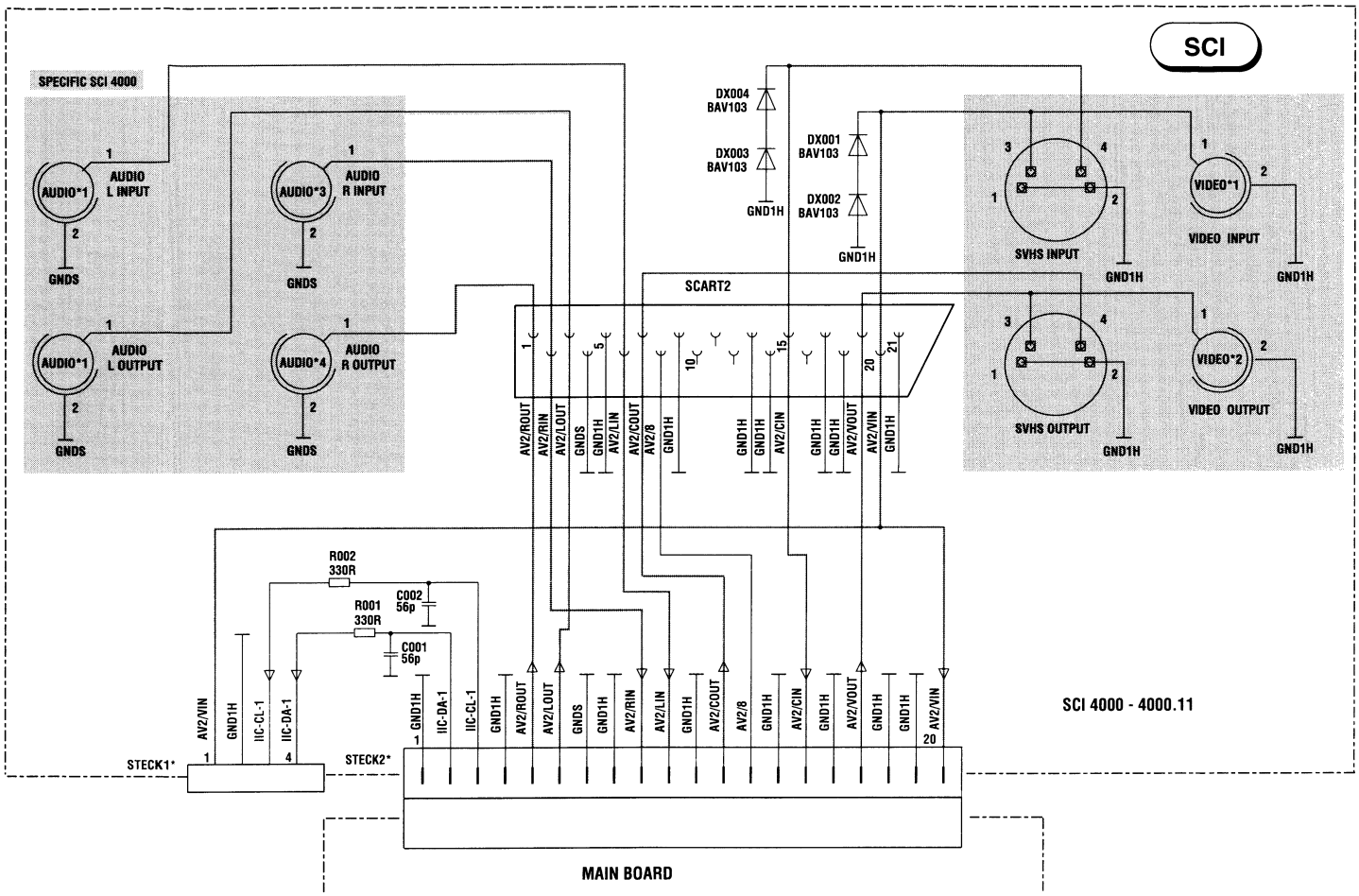

SCI 4000

COMPONENT SIDE - COTE ELEMENTS - BESTÜCKUNGSSEITE
LATO COMPONENTI - LADO COMPONENTES

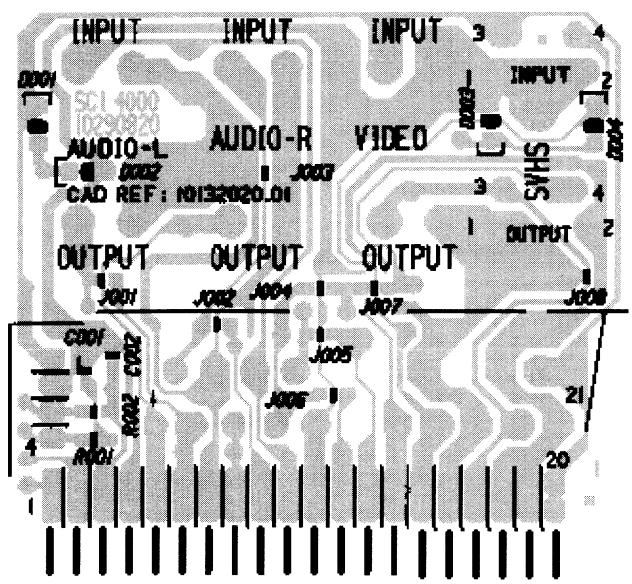

IF AMPLIFIER - AMPLIFICATEURS FI - ZF VERSTÄRKER - AMPLIFICATORE FI - AMPLIFICADOR FI For information only

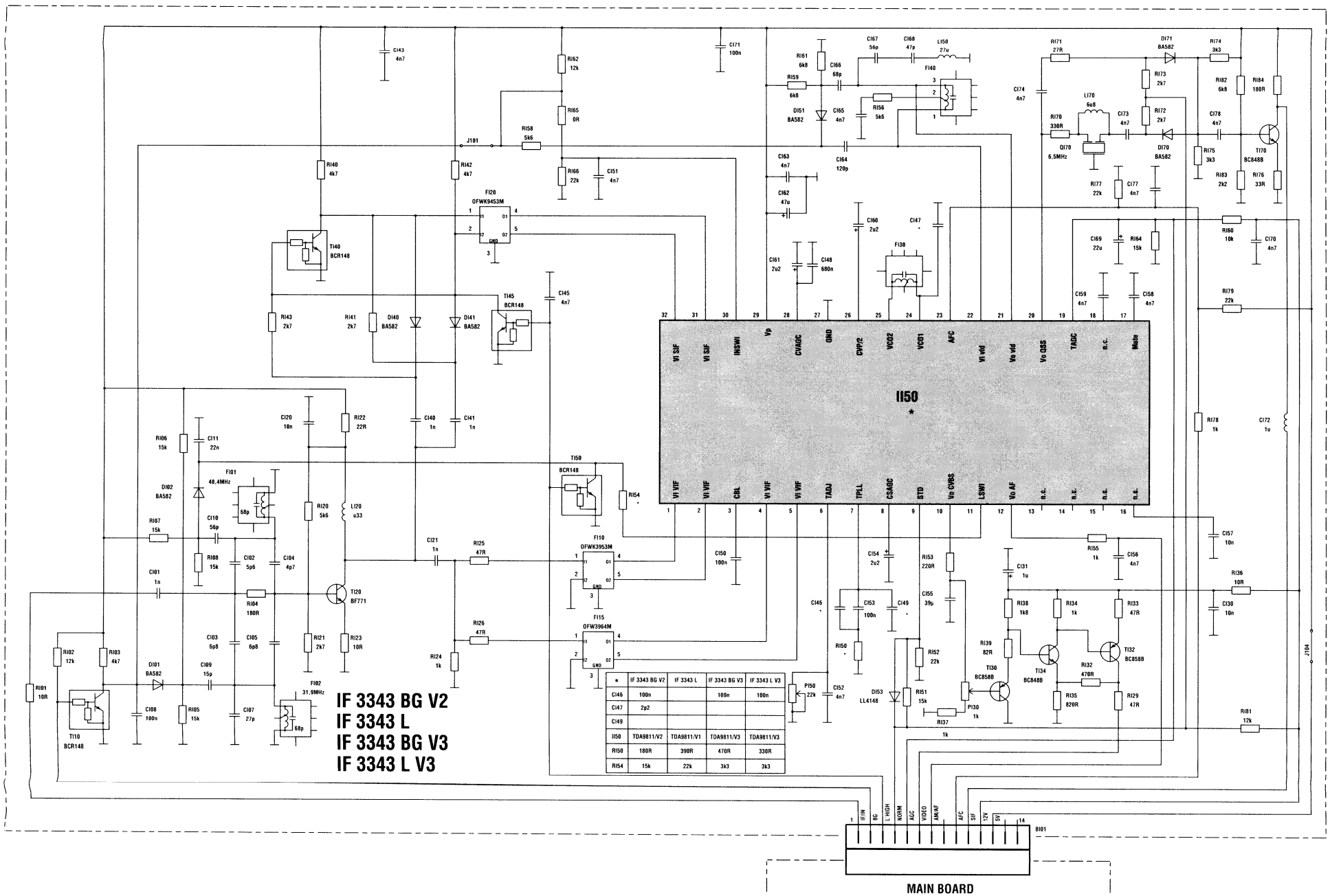

*	IF 3343 BG V2	IF 3343 L	IF 3343 BG V3	IF 3343 L V3
CI46	100n		100n	100n
CI47	2p2			
CI49				
I150	TDA9811/V2	TDA9811/V1	TDA9811/V3	TDA9811/V3
RI50	180R	390R	470R	330R
RI54	15k	22k	3k3	3k3

COMPONENT SIDE - COTE ELEMENTS - BESTÜCKUNGSSEITE - LATO COMPONENTI - LADO COMPONENTES

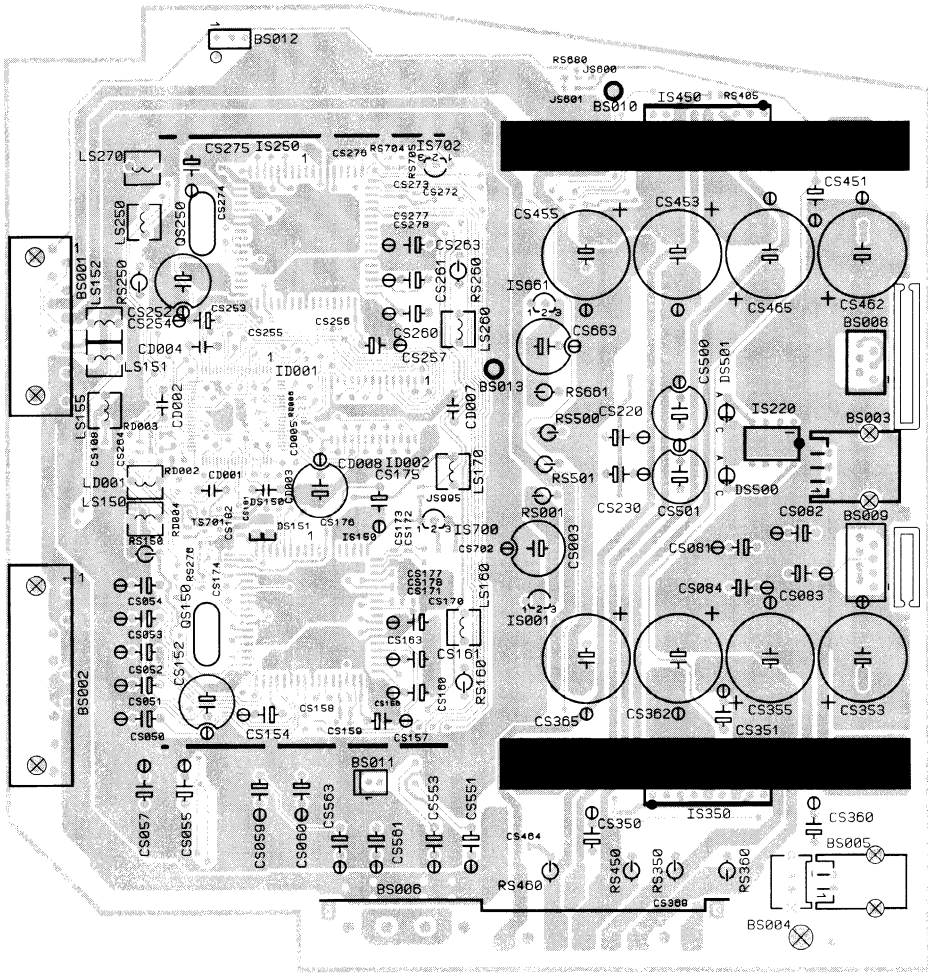

SOLDER SIDE - COTE CUIVRE - LÖTSEITE - LATO SALDATURE - LADO DEL COBRE

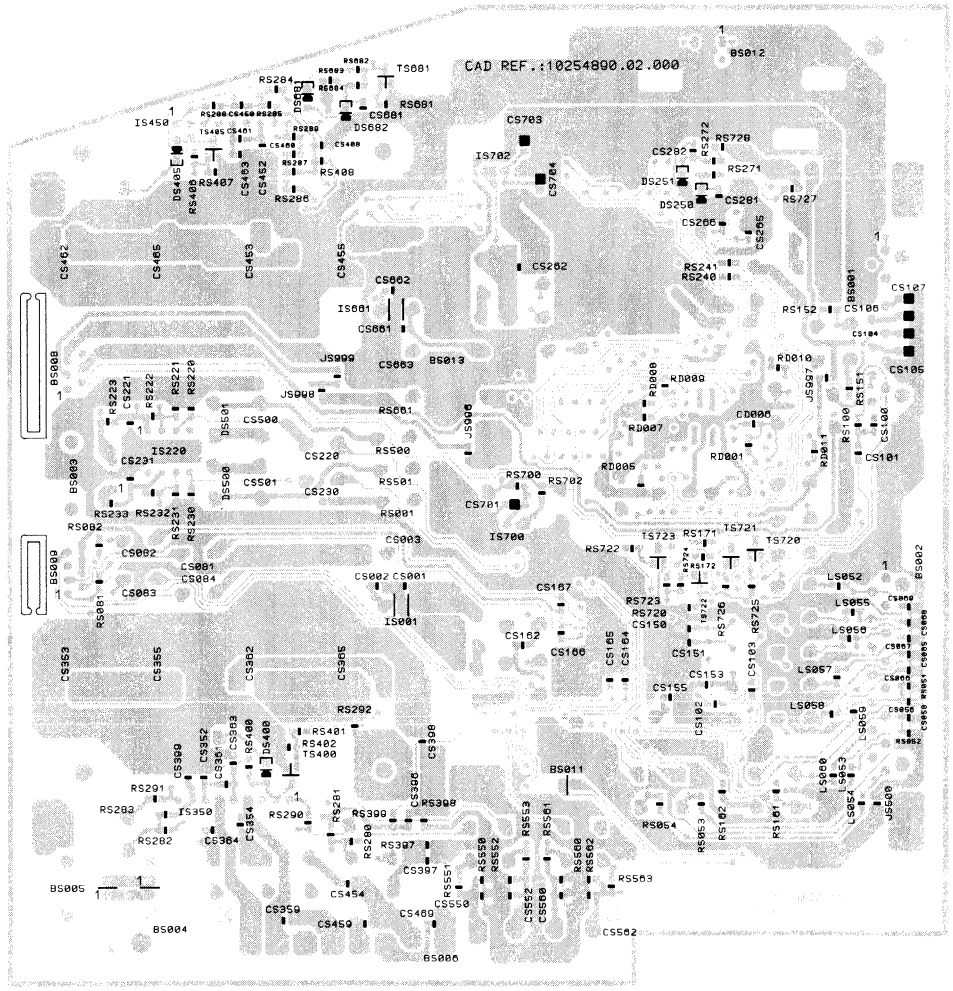

AUDIO SIGNAL / DOLBY MODULE - MODULE AUDIO / DOLBY - TON SIGNAL / DOLBY BAUSTEIN - MODULO AUDIO / DOLBY - MÓDULO AUDIO / DOLBY

AMFM

	BS008	BS011	CS264	CS265	CS266	CS702	CS703	CS704	JS995	JS997	JS998	QS250	RS704	RS705	TS702
AM/DP 4011 00	–	–	×	–	–	×	–	–	×	×	×	–	–	–	–
AM/DP 4013 00	×	×	–	×	×	–	×	×	–	–	–	×	×	×	×

IS250 MSPC3400

IS150 MSP3410-TC15

IS702 MC33164P-5

IS700 MN1381-S

IS350 TDA2615

IS450 TDA2615

IS220 MC 33076

IS661 78L08

IS001 78L08

ID001 DSP56004

ID002 GM76C256L

AM/DP 4011 00

AM/DP 4013 00

SUB SATELLITE MODULE - SOUS MODULE SATELLITE - SATELLITEN SUB MODUL
MODULO SATELLITE - MÓDULO SATELLITE

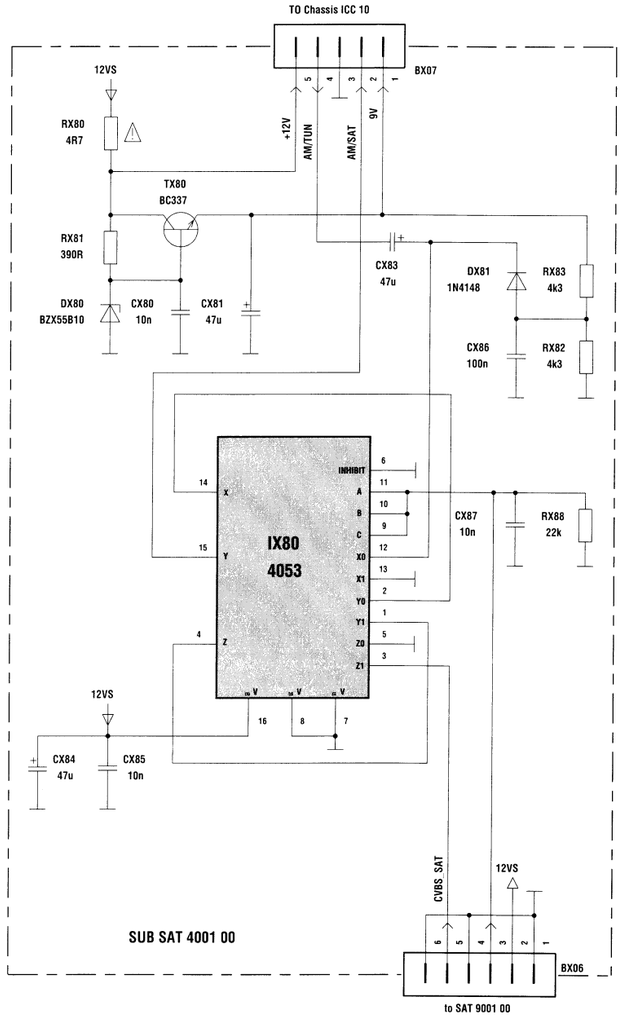

COMPONENT SIDE - COTE ELEMENTS
BESTÜCKUNGSSEITE
LATO COMPONENTI - LADO COMPONENTES

SOLDER SIDE - COTE CUIVRE
LÖTSEITE
LATO SALDATURE - LADO DEL COBRE

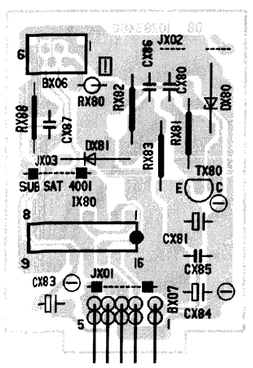

SUB SAT 4001

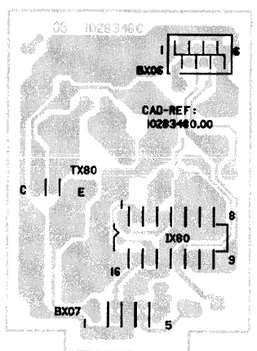

SAT 9001

COMPONENT SIDE - COTE ELEMENTS - BESTÜCKUNGSSEITE - LATO COMPONENTI - LADO COMPONENTES

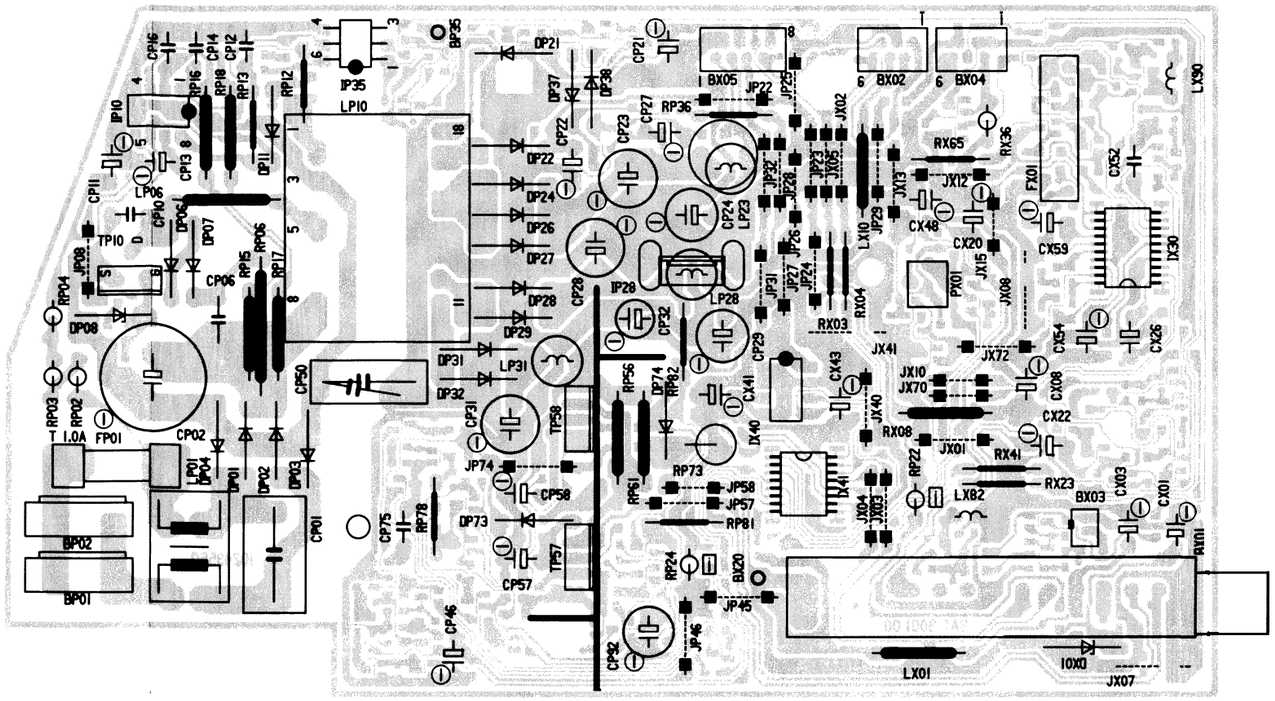

SOLDER SIDE - COTE CUIVRE - LÖTSEITE - LATO SALDATURE - LADO DEL COBRE

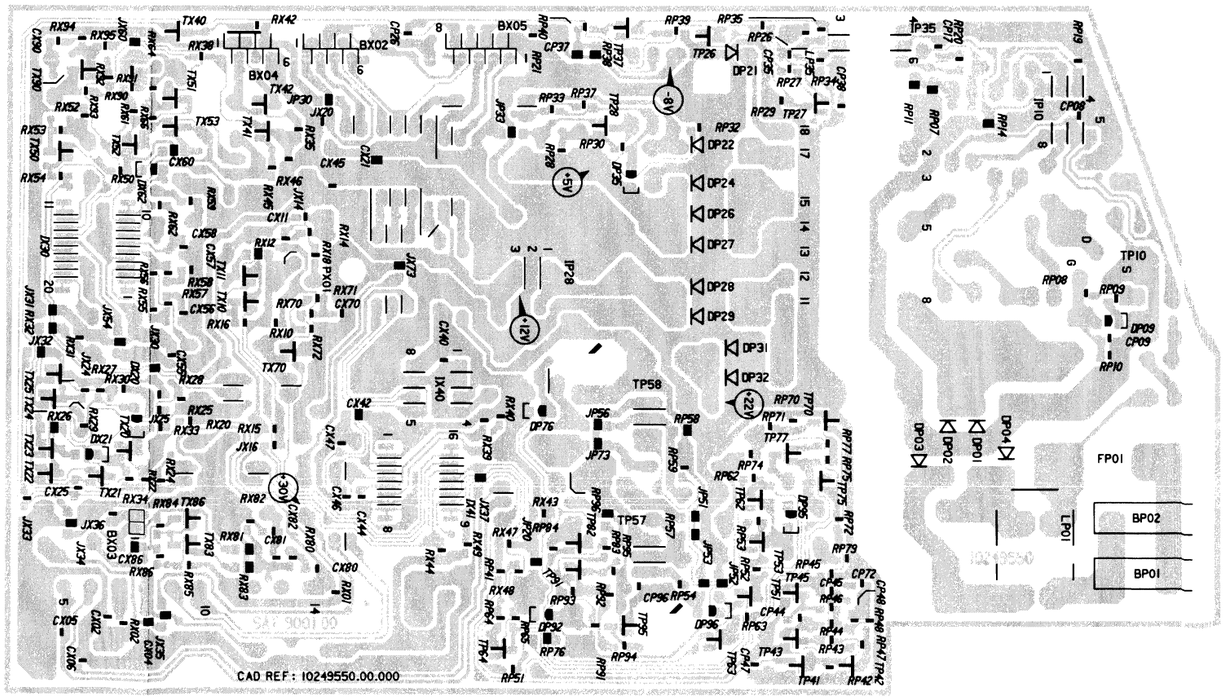

SATELLITE MODULE - MODULE SATELLITE - SATELLITEN MODUL - MODULO SATELLITE - MÓDULO SATELLITE

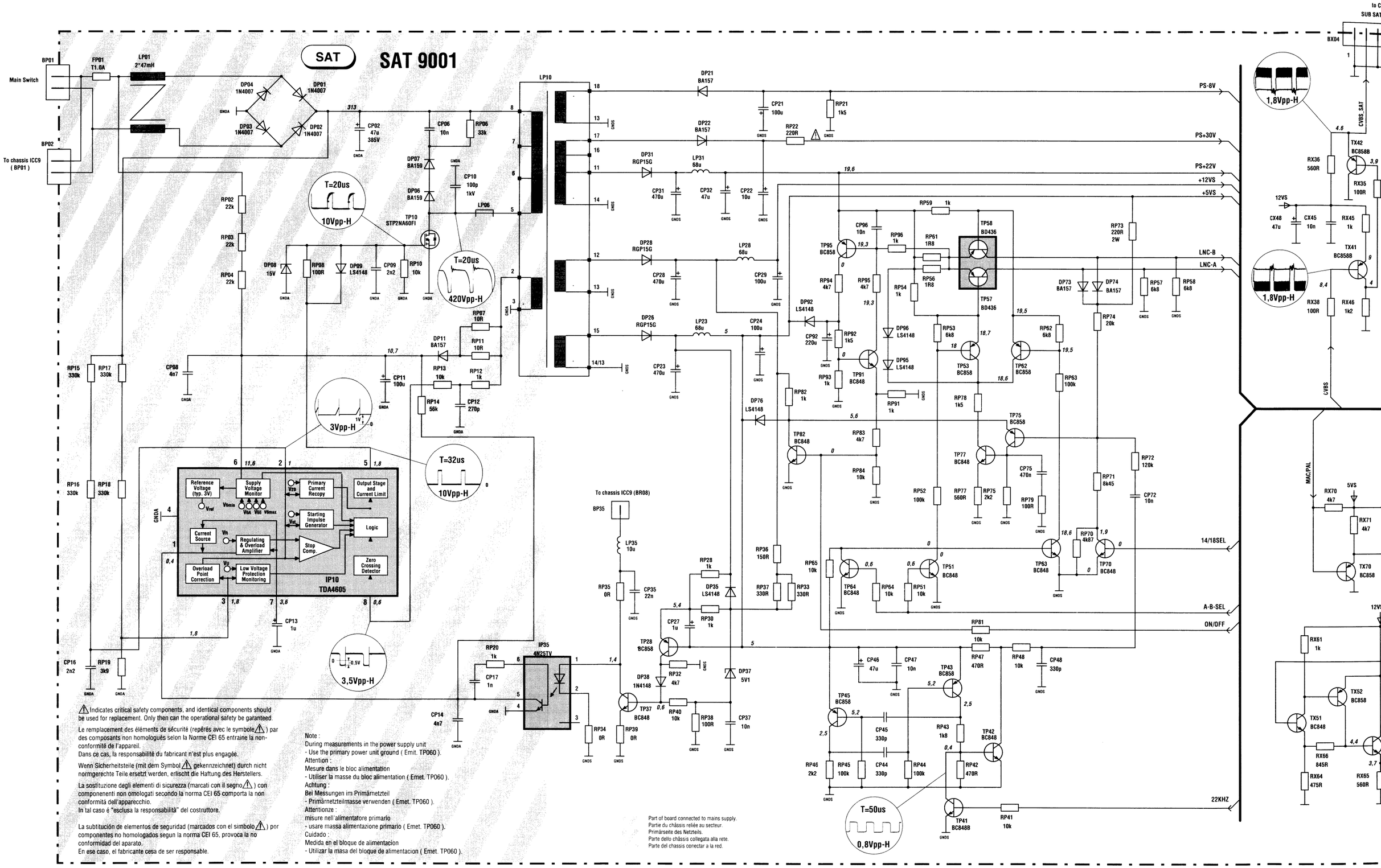

⚠ Indicates critical safety components, and identical components should be used for replacement. Only then can the operational safety be garanteed.

Le remplacement des éléments de sécurité (repérés avec le symbole ⚠) par des composants non homologués selon la Norme CEI 65 entraine la non-conformité de l'appareil.
Dans ce cas, la responsabilité du fabricant n'est plus engagée.

Wenn Sicherheitsteile (mit dem Symbol ⚠ gekennzeichnet) durch nicht normgerechte Teile ersetzt werden, erlischt die Haftung des Herstellers.

La sostituzione degli elementi di sicurezza (marcati con il segno ⚠) con componenenti non omologati secondo la norma CEI 65 comporta la non conformità dell'apparecchio.
In tal caso è "esclusa la responsabilità" del costruttore.

La subtitución de elementos de seguridad (marcados con el simbolo ⚠) por componentes no homologados segun la norma CEI 65, provoca la no conformidad del aparato.
En ese caso, el fabricante cesa de ser responsable.

Note :
During measurements in the power supply unit
- Use the primary power unit ground (Emit. TP060).
Attention :
Mesure dans le bloc alimentation
- Utiliser la masse du bloc alimentation (Emet. TP060).
Achtung :
Bei Messungen im Primärnetzteil
- Primärnetzteilmasse verwenden (Emet. TP060).
Attentionze :
misure nell'alimentatore primario
- usare massa alimentazione primario (Emet. TP060).
Cuidado :
Medida en el bloque de alimentacion
- Utilizar la masa del bloque de alimentacion (Emet. TP060).

Part of board connected to mains supply.
Partie du châssis reliée au secteur.
Primärseite des Netzteils.
Parte dello châssis collegata alla rete.
Parte del chassis conectar a la red.

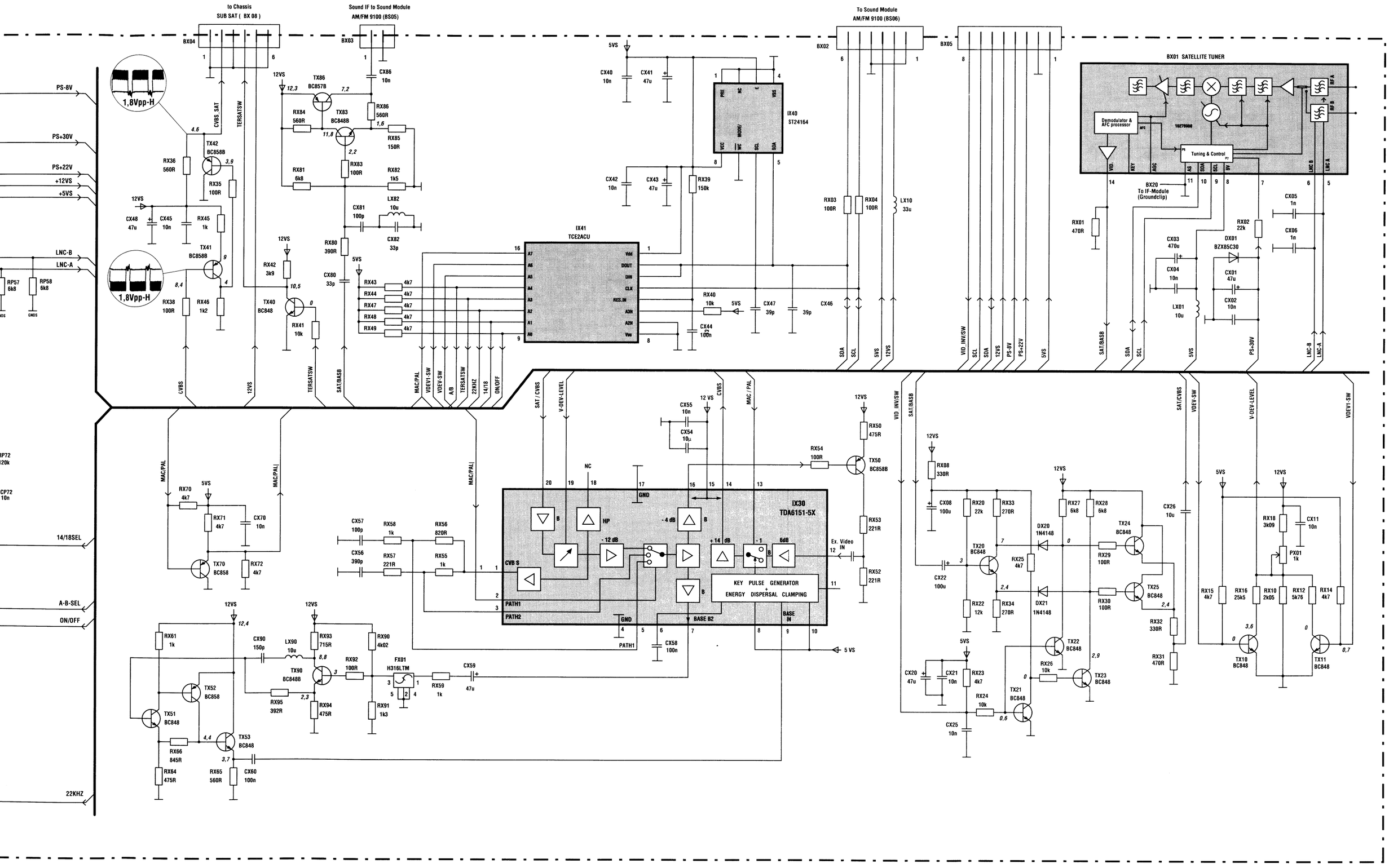
to Chassis
SUB SAT (BX 08)
Sound IF to Sound Module
AM/FM 9100 (BS05)
To Sound Module
AM/FM 9100 (BS06)
BX01 SATELLITE TUNER
Demodulator & AFC processor
Tuning & Control
BX20
To IF-Module
(Groundclip)
IX40
ST24164
IX41
TCE2ACU
IX30
TDA6151-5X
KEY PULSE GENERATOR
+
ENERGY DISPERSAL CLAMPING
1,8Vpp-H
PS-8V
PS+30V
PS+22V
+12VS
+5VS
LNC-B
LNC-A
14/18SEL
A-B-SEL
ON/OFF
22KHZ
CVBS
12VS
TERSATSW
SAT/BASB
MAC/PAL
VDEV1-SW
VDEV-SW
A/B
22KHZ
14/18
ON/OFF
SAT / CVBS
V-DEV-LEVEL
VID_INV/SW
SDA
SCL
5VS
PS-8V
PS+22V
PS+30V
LNC-B
LNC-A
Ex. Video IN
5 VS
GND
PATH1
PATH2
BASE B2
BASE IN
CVB S
NC
HP
- 12 dB
- 4 dB
+ 14 dB
6dB
TX86
BC857B
TX83
BC848B
TX42
BC858B
TX41
BC858B
TX40
BC848
TX70
BC858
TX50
BC858B
TX20
BC848
TX21
BC848
TX22
BC848
TX23
BC848
TX24
BC848
TX25
BC848
TX10
BC848
TX11
BC848
TX90
BC848B
TX51
BC848
TX52
BC858
TX53
BC848
FX01
H316LTM
DX01
BZX85C30
DX20
1N4148
DX21
1N4148
PX01
1k

VIDEO AMPLIFIER - AMPLIFICATEURS VIDEO - VIDEOVERSTÄRKER
AMPLIFICATORE VIDEO - AMPLIFICADOR VIDEO

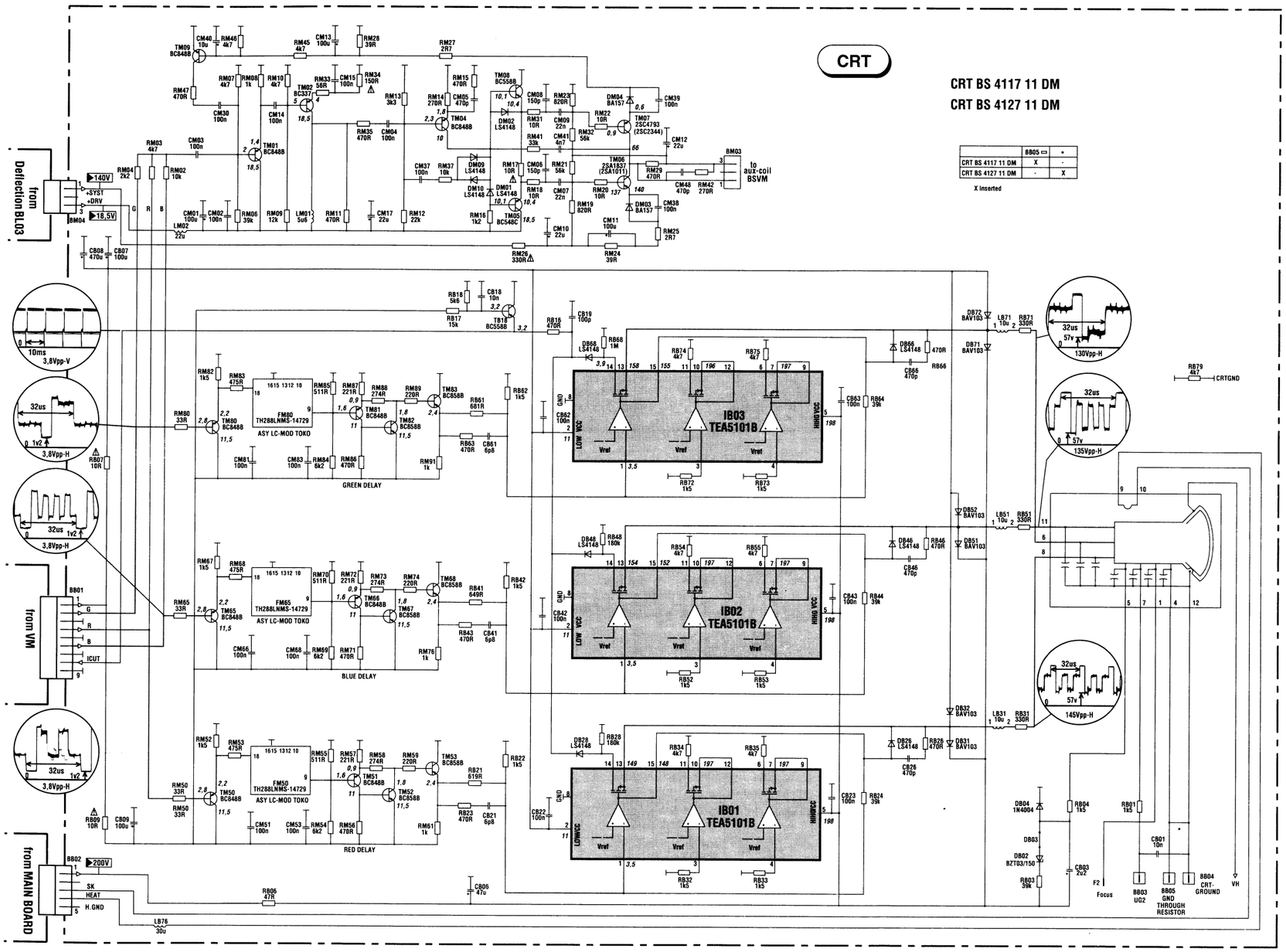

FOCUS MODULE - MODULE FOCUS - FOKUS BAUSTEIN
MODULO FUOCO - MODULO FOCUS

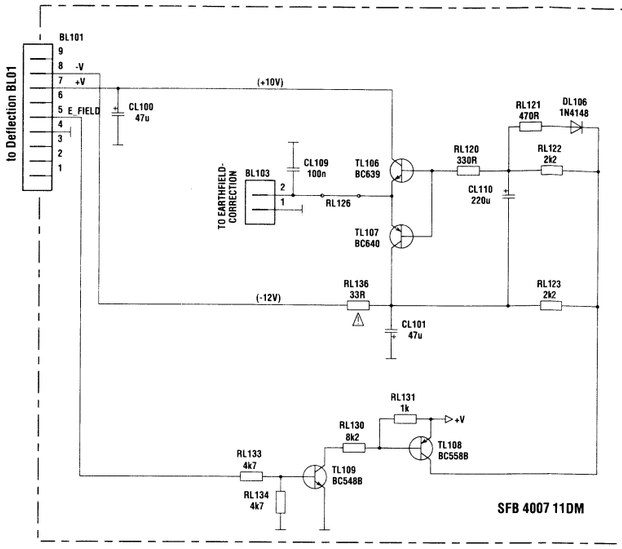

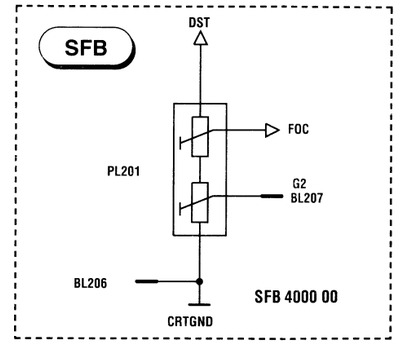

COMPONENT SIDE - COTE ELEMENTS - BESTÜCKUNGSSEITE
LATO COMPONENTI - LADO COMPONENTES

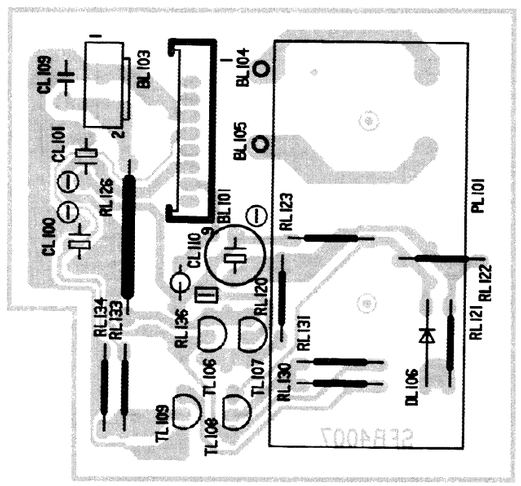

ULE FOCUS - FOKUS BAUSTEIN
CO - MODULO FOCUS

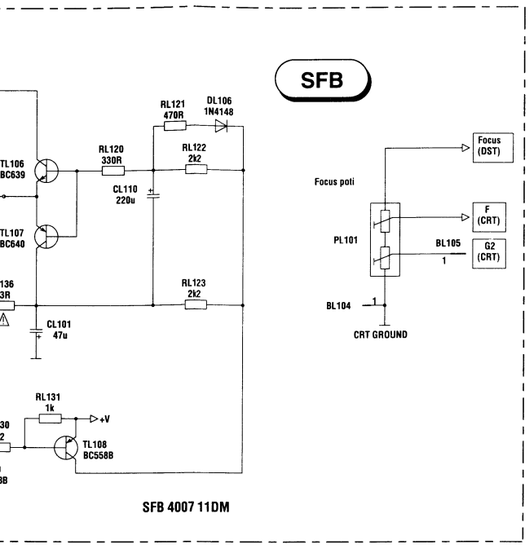

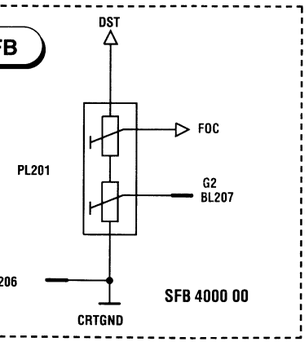

S - BESTÜCKUNGSSEITE
COMPONENTES

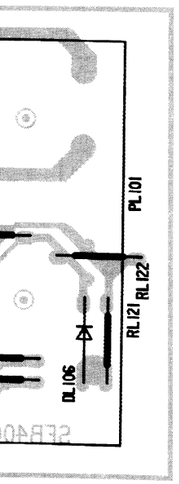

SFB 4007

SOLDER SIDE - COTE CUIVRE - LÖTSEITE
LATO SALDATURE - LADO DEL COBRE

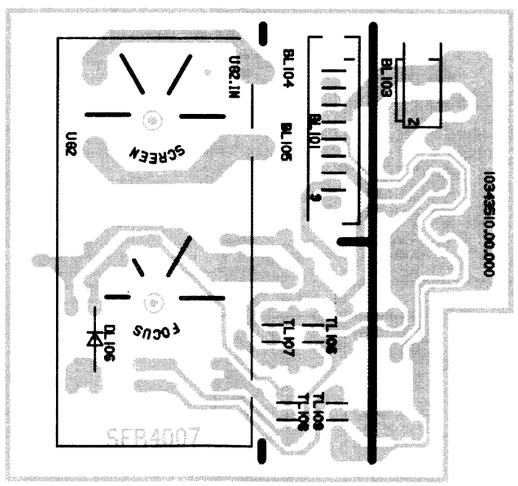

FRONT CONNECTION BOARD - MODULE PRISES EN FACADE ET INTERCONNEXION DU CLAVIER - FRONTANSCHLUSSPLATTE
PIASTRA CONNESSIONE FRONTALE - PLÁTINA MANDOS FRONTAL

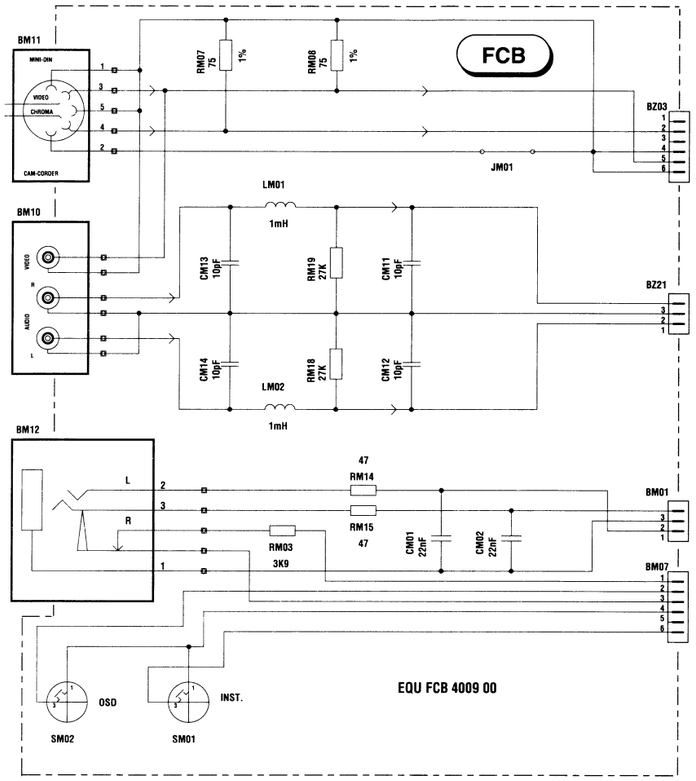

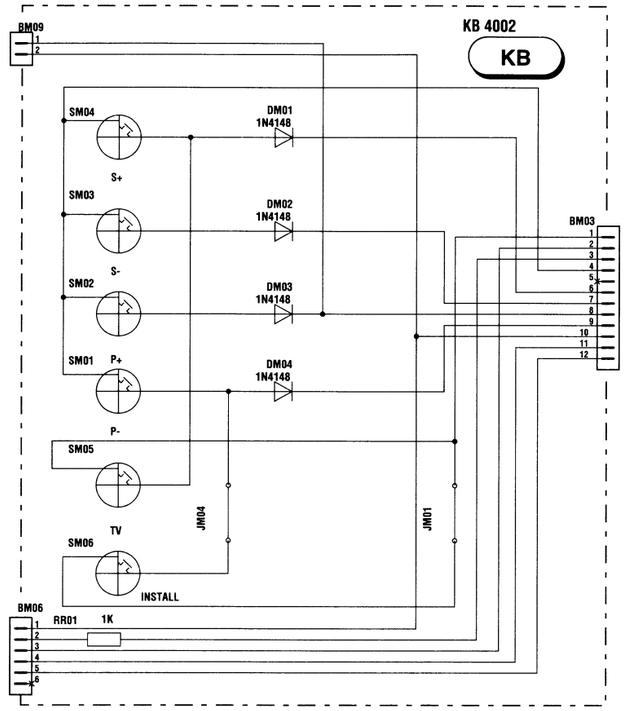

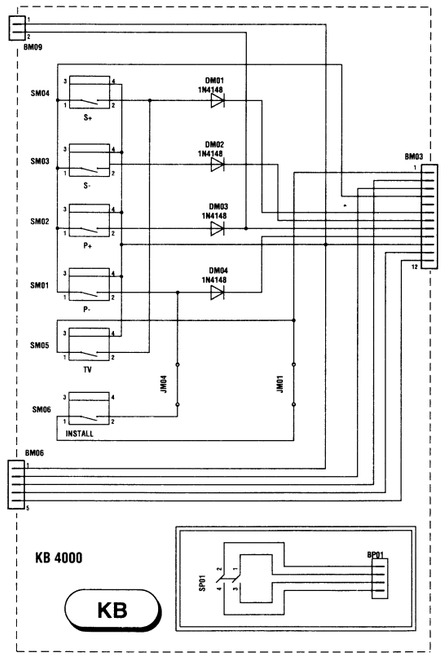

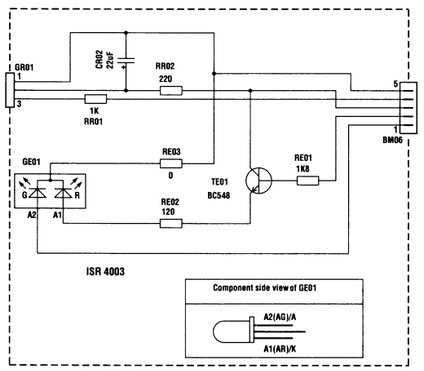

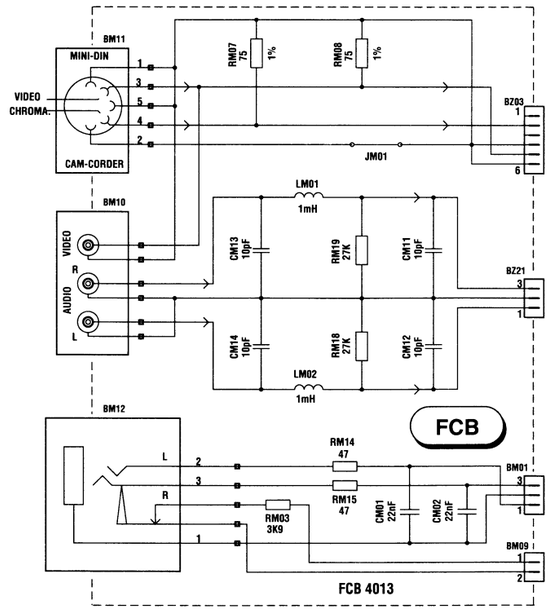

COMPONENT SIDE - COTE ELEMENTS - BESTÜCKUNGSSEITE
LATO COMPONENTI - LADO COMPONENTES

FCB 4009

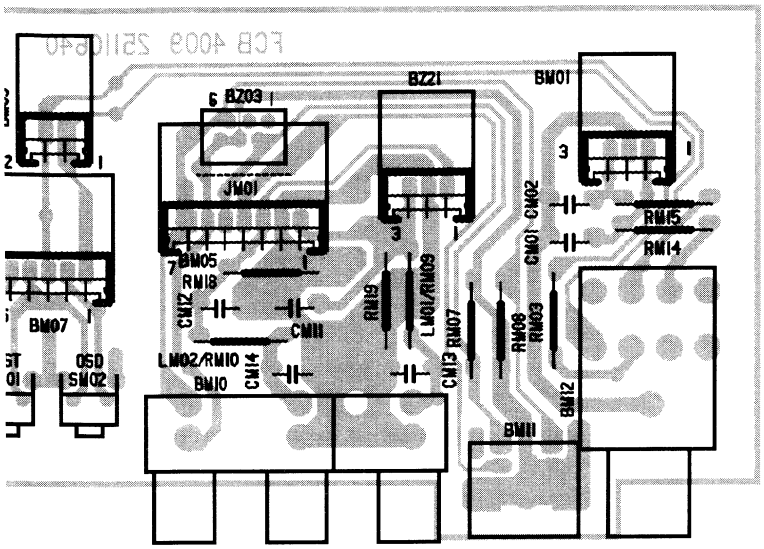

FCB 4000

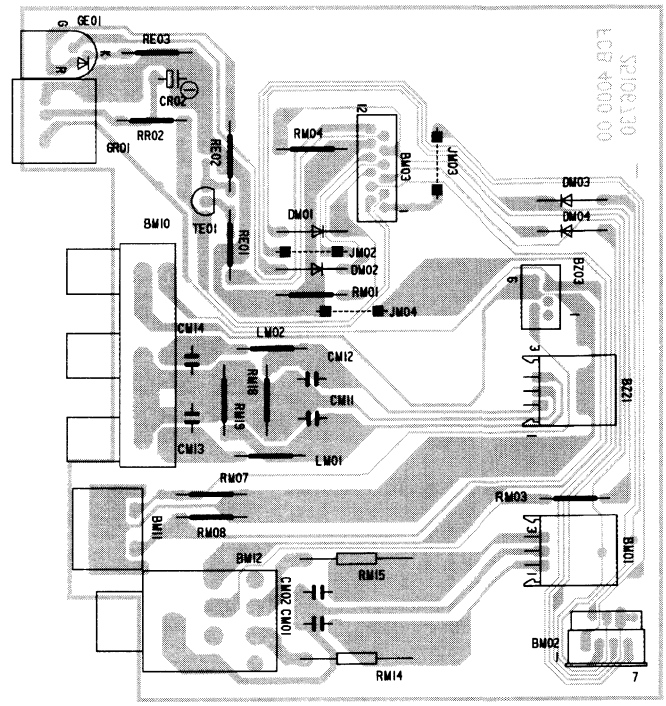

COMPONENT SIDE - COTE ELEMENTS - BESTÜCKUNGSSEITE
LATO COMPONENTI - LADO COMPONENTES

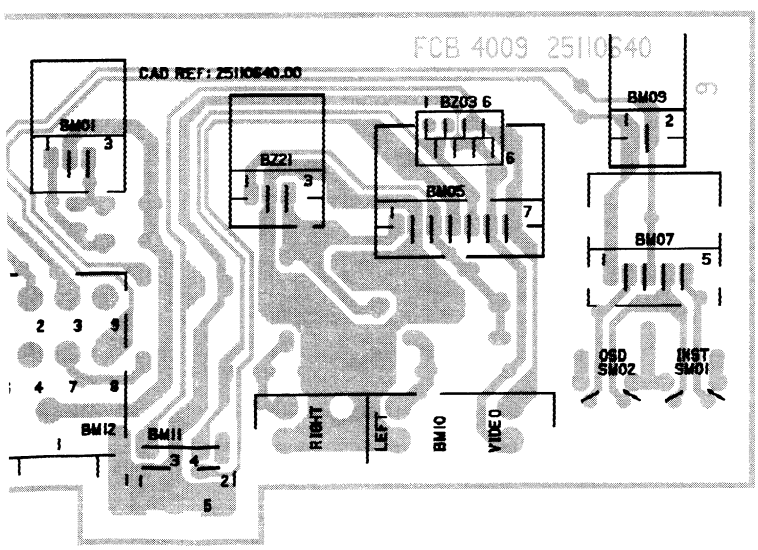

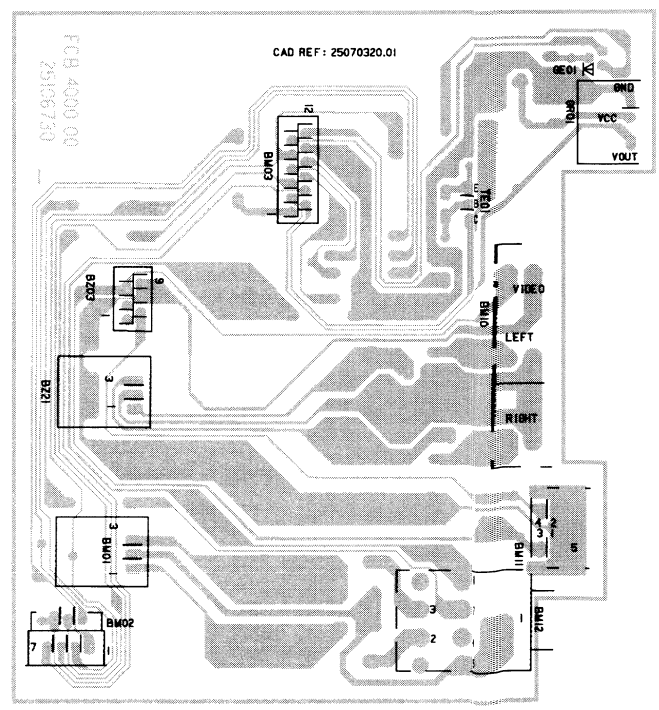

AM FM 9110 - 03

COMPONENT SIDE - COTE ELEMENTS - BESTÜCKUNGSSEITE - LATO COMPONENTI - LADO COMPONENTES

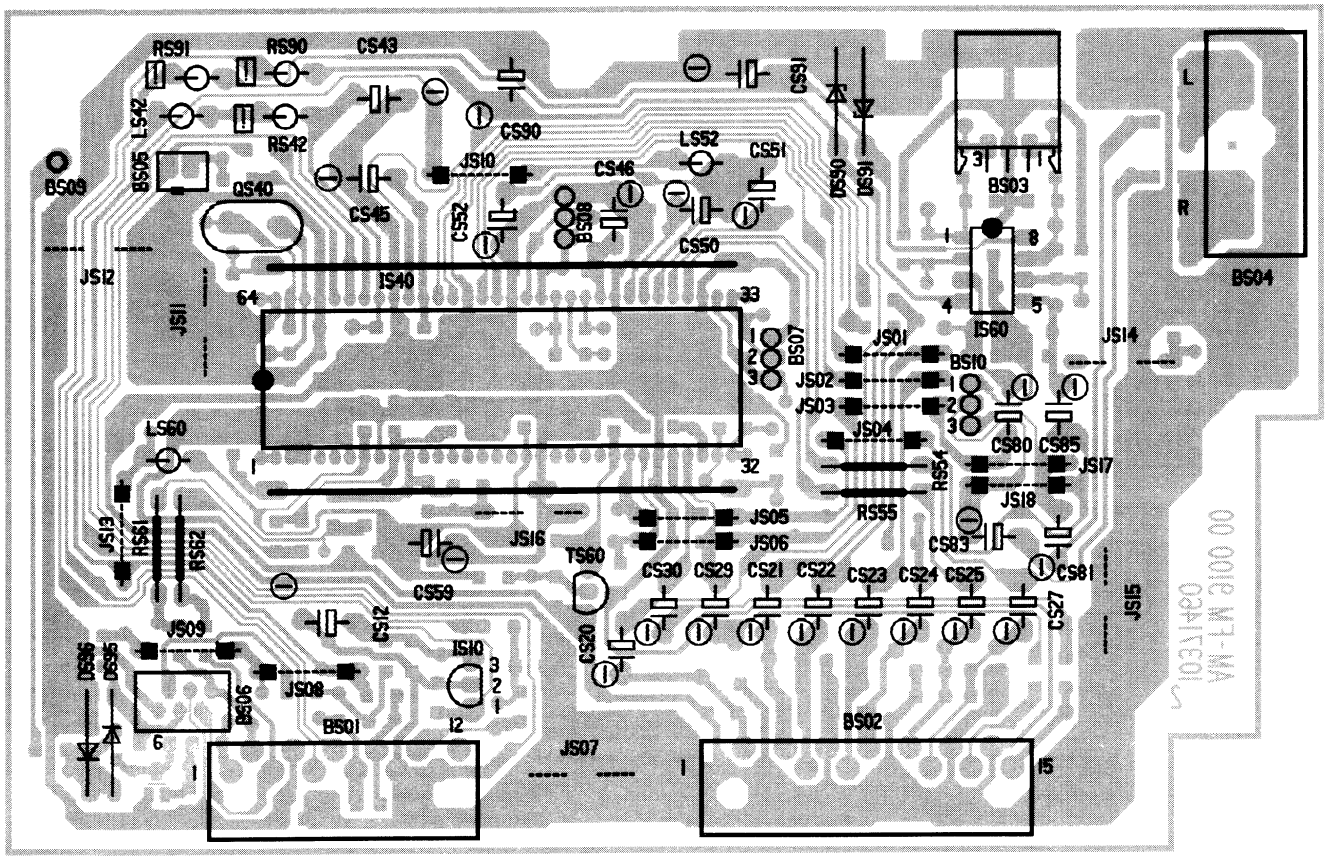

SOLDER SIDE - COTE CUIVRE - LÖTSEITE - LATO SALDATURE - LADO DEL COBRE

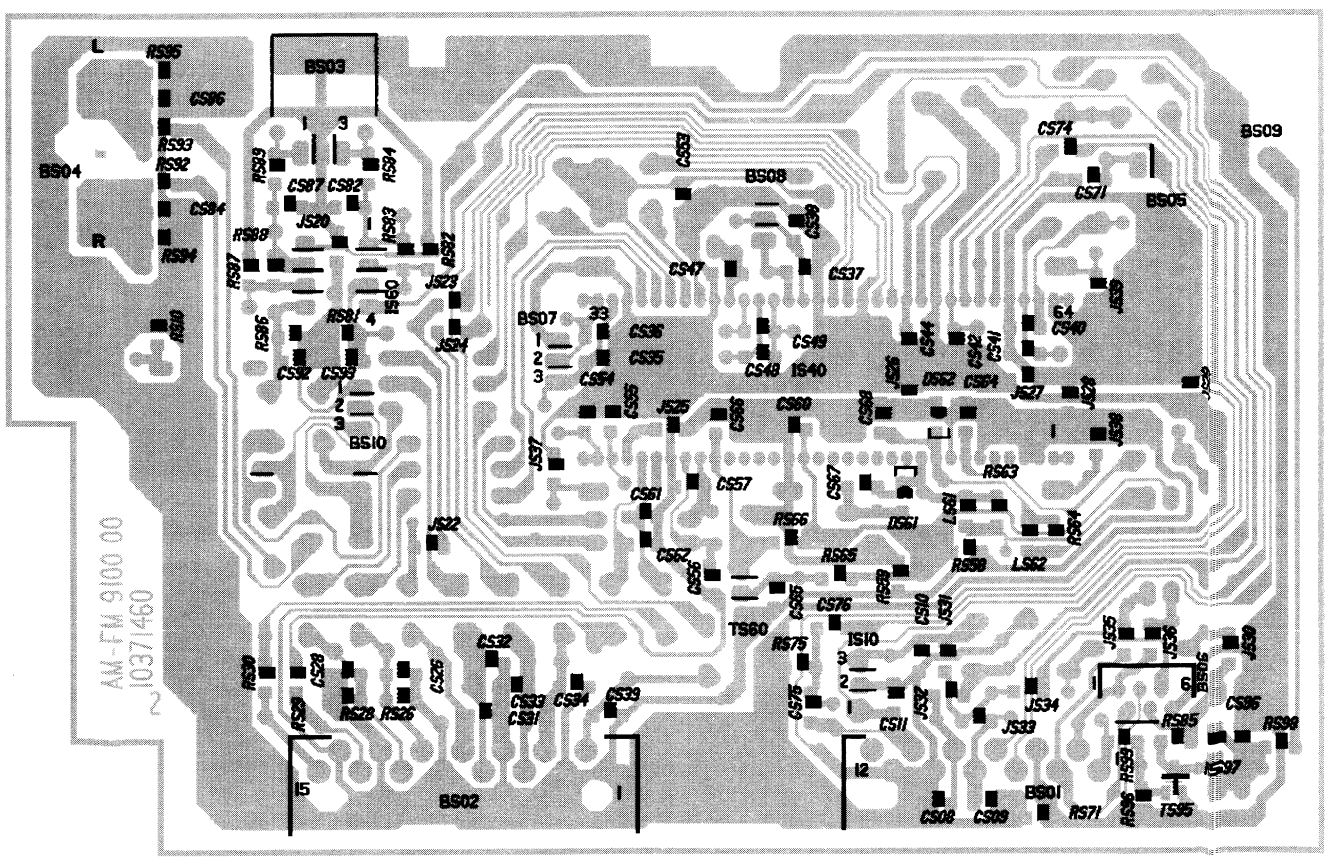

AUDIO MODULE - MODULE AUDIO - TON SIGNAL BAUSTEIN - MODULO AUDIO - MÓDULO AUDIO

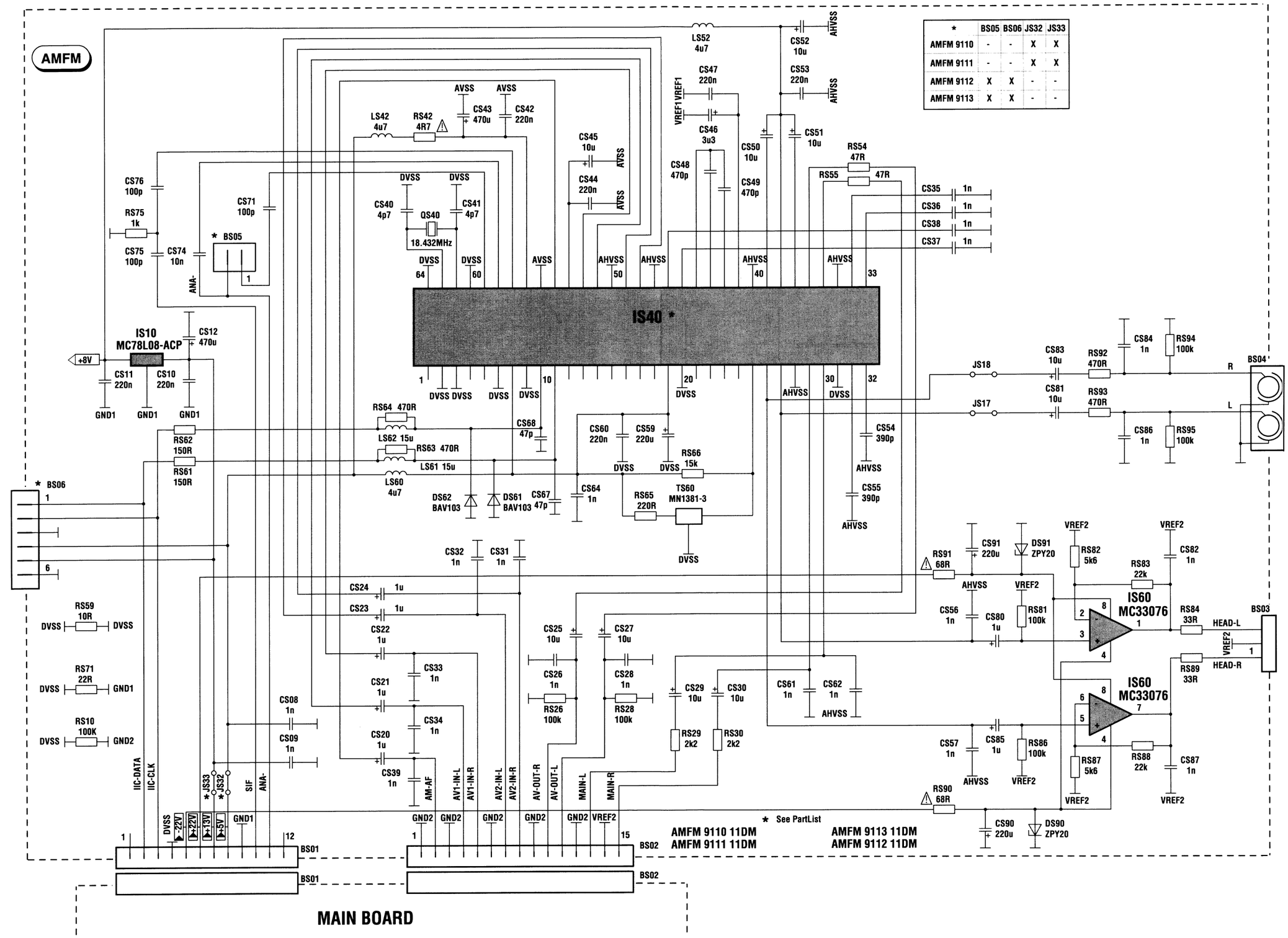

*	BS05	BS06	JS32	JS33
AMFM 9110	-	-	X	X
AMFM 9111	-	-	X	X
AMFM 9112	X	X	-	-
AMFM 9113	X	X	-	-

PICTURE IN PICTURE - MODULE IMAGE DANS L'IMAGE - BILD IM BILD BAUSTEIN - MODULO IMMAGINE NELL' IMMAGINE - MÓDULO IMAGEN EN IMAGEN

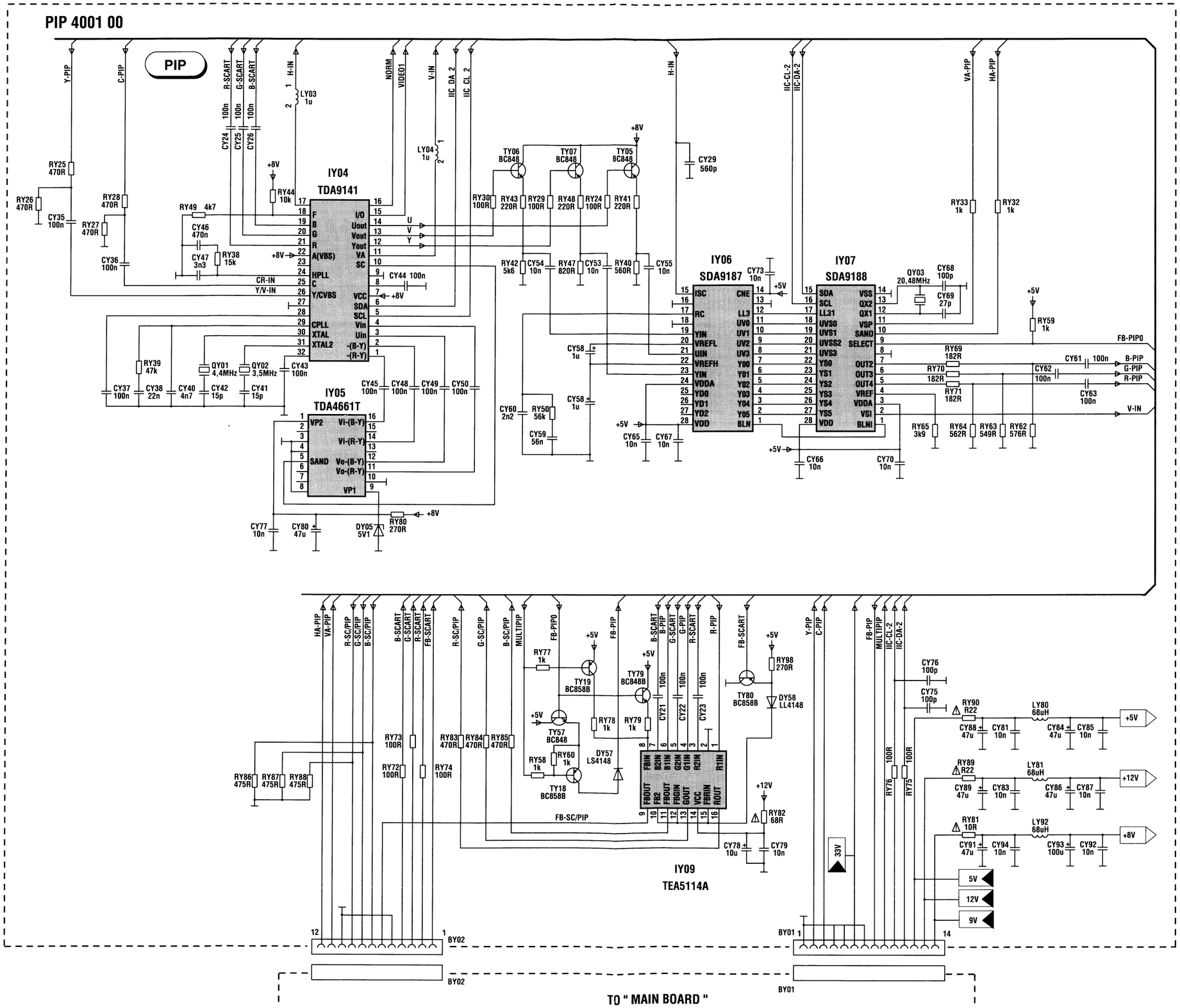

COMPONENT SIDE - COTE ELEMENTS - BESTÜCKUNGSSEITE - LATO COMPONENTI - LADO COMPONENTES

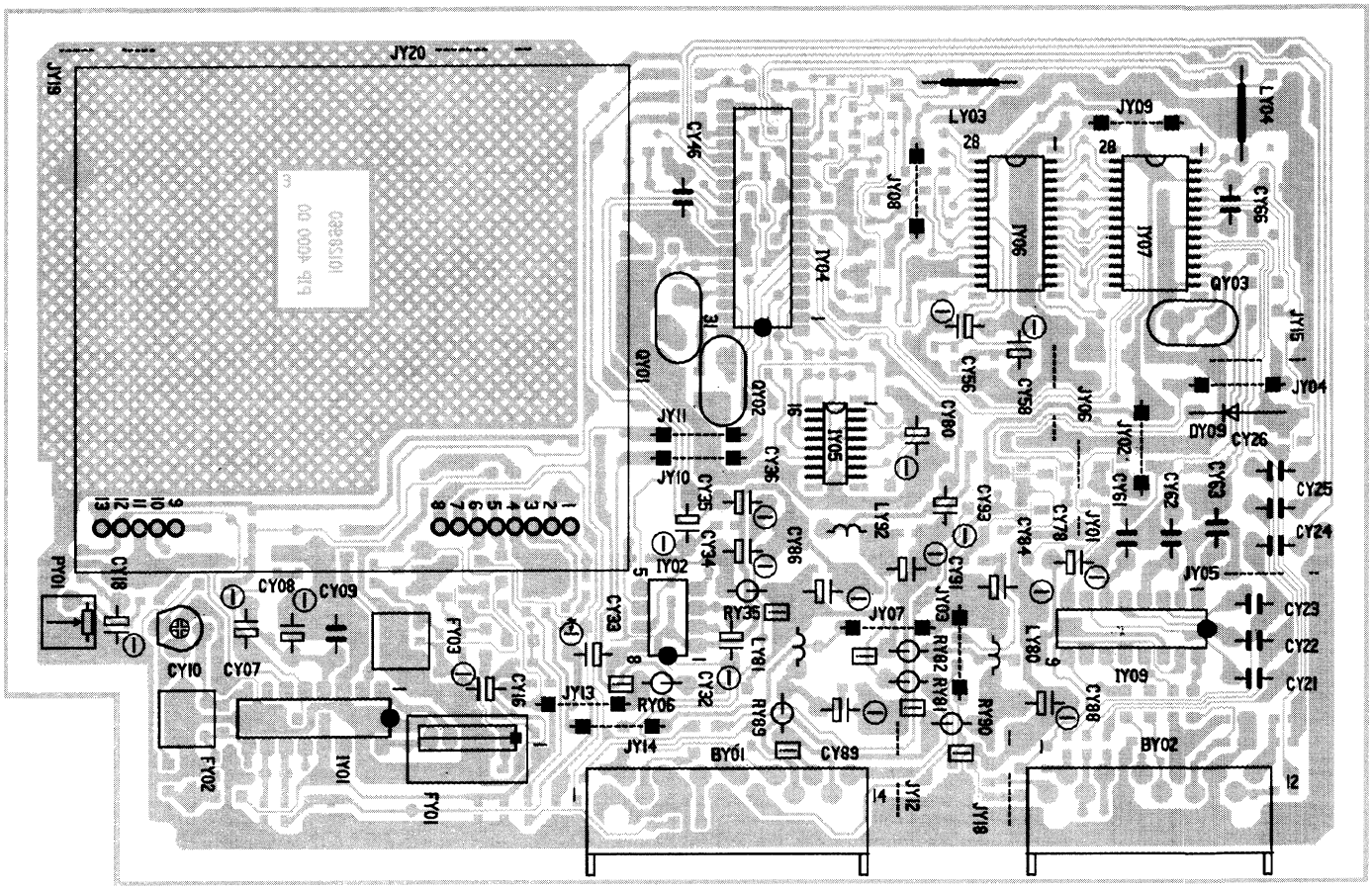

SOLDER SIDE - COTE CUIVRE - LÖTSEITE - LATO SALDATURE - LADO DEL COBRE

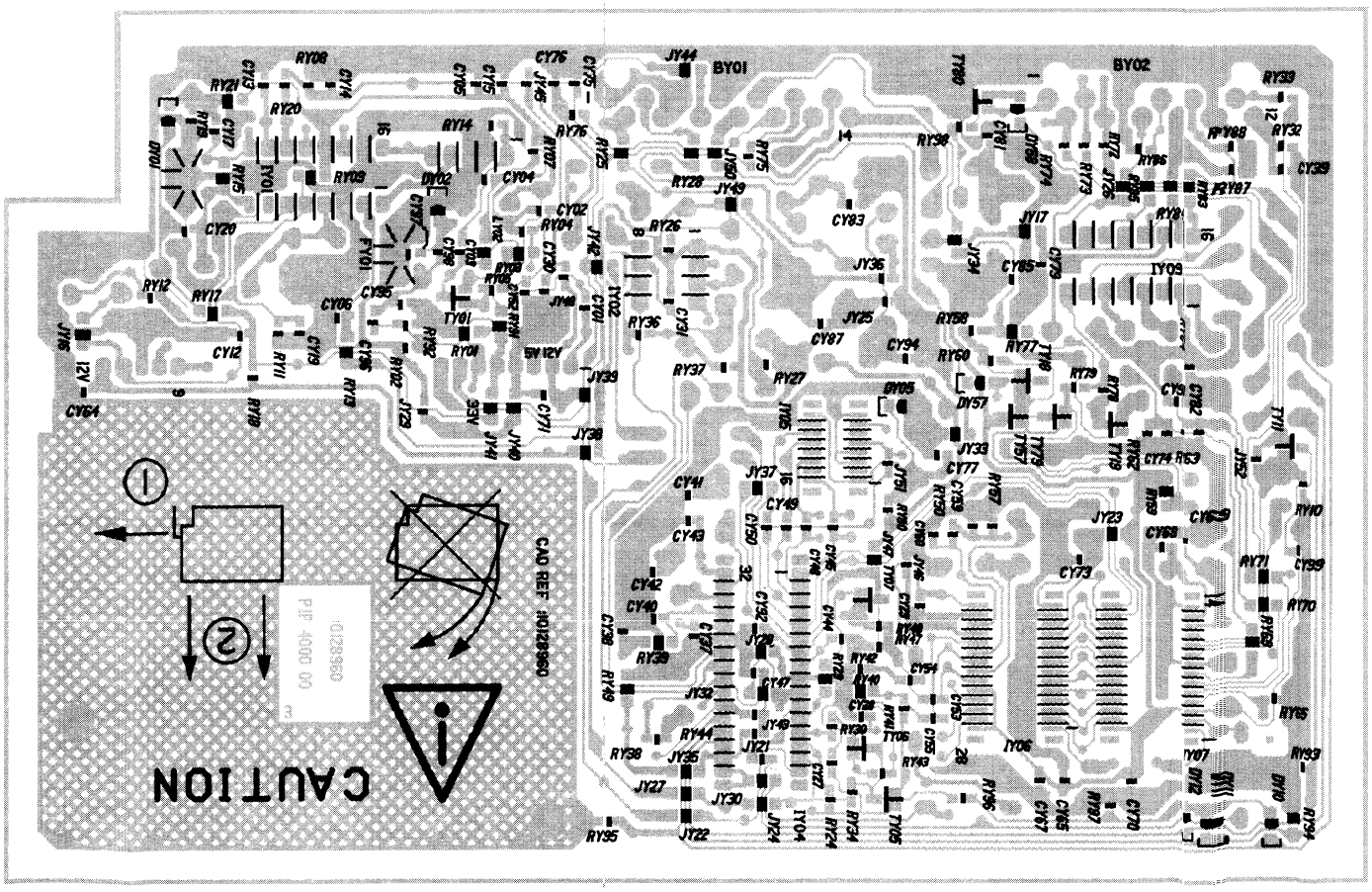

IF AMPLIFIER - AMPLIFICATEURS FI - ZF VERSTÄRKER - AMPLIFICATORE FI - AMPLIFICADOR FI

For information only

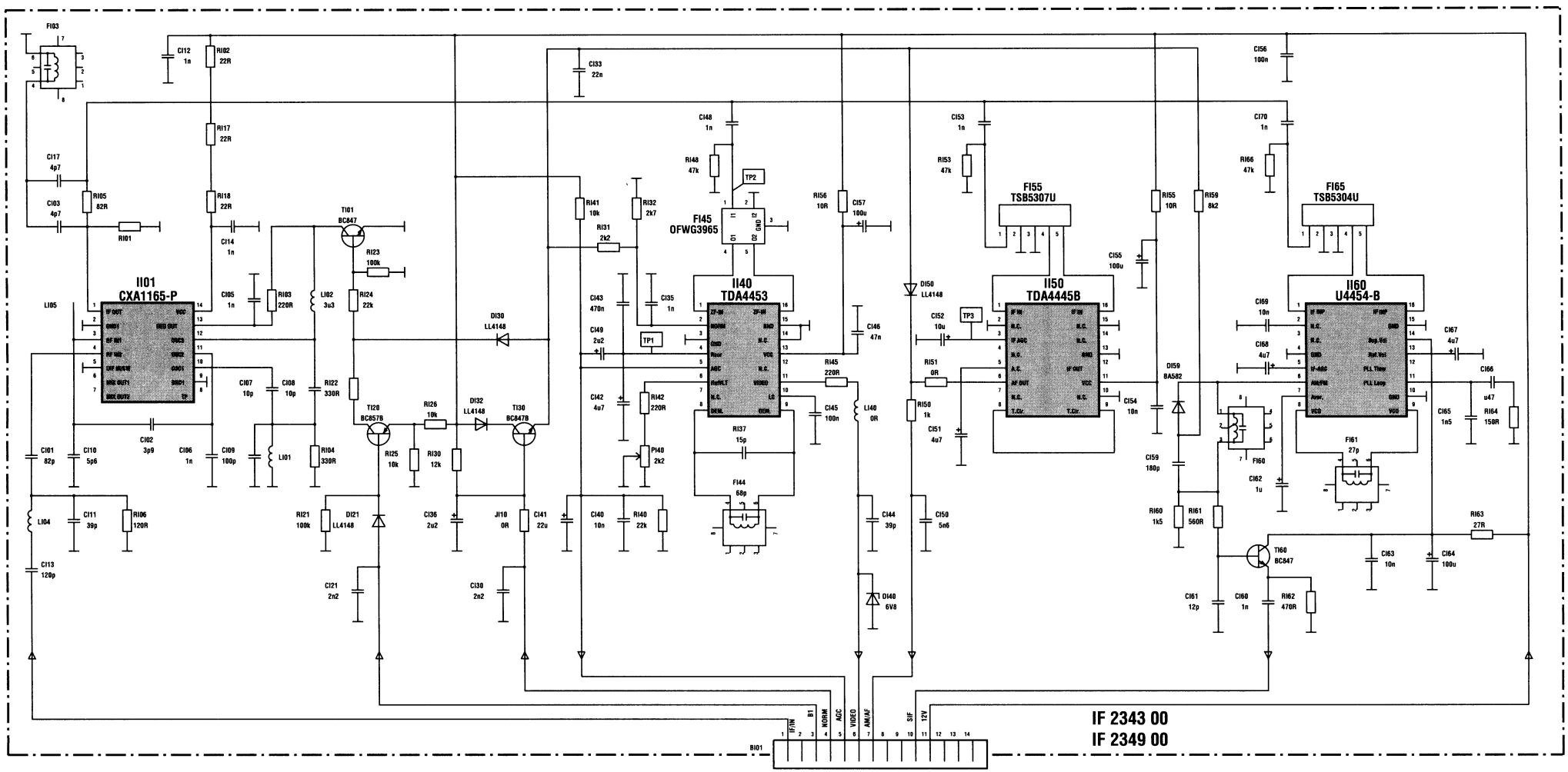

Ersatzteile · Spare parts list · Liste de pièces de rechange · Lista parti di ricambio Lista de piezas de recambio

Wichtig: Bei Ersatzteilbestellungen bitte unbedingt die entsprechende Bestellnummer angeben!
N. B.: When demanding Spare Parts it is absolutely necessary to quote the corresponding part number!
Important: Lors d'une commande de pièces de rechange, prière d'indiquer et tout cas le numéro de la pièce!
Importante: Ordinare sempre con il numero correspondenti di codice!
Importante: Pedir siempre los recambios con el numero correspondiente codigo!

Pos.	Art.-Nr Part No. Code	Bezeichnung	Part	Désignation
		MOD./AUSTAUSCHTEILE:	**EXCHANGE PARTS:**	**ECHANGE PLATINE:**
AMDP4013	103.361.80	AM/DP4013 TON-MODUL	AM/DP4013 PCB SOUND	MA/DP4013 PLATINE
AMFM9111	102.502.40	AM/FM9111 TON-MODUL	AM/FM9111 PCB SOUND	MA/FI9111 PLATINE
AMFM9112	102.969.70	AM/FM9112 TON-MODUL	AM/FM9112 PCB SOUND	MA/FI9112 PLATINE
AMFM9110	103.713.10	AM/FM9110 11DM TON- MODUL	AM/FM9110 PCB SOUND	MA/FI9110 PLATINE
IF3342	102.575.50	IF3342 ZF-VERSTÄRKER V3	IF3342 UNIT	MF3342 UNITE
IF3343	102.892.50	IF3343 ZF-VERSTÄRKER V1	IF3343 UNIT	MF3343 UNITE
MTP4015F	202.576.50	MTP4015F TUNER VP	MTP4015F TUNER	MTP4015F TUNER
PIP4001	103.283.50	PIP4001 BILD IM BILD	PIP4001 PICTURE IN PICTURE	PIP4001 PLATINE
VM4001	102.624.20	VM4001DM VIDEO- U. TEXT MODUL	VM4001DM P.C.B., VIDEO	VM4001DM PLATINE VIDEO
VM4001	103.017.00	VM4001 VIDEO- U. TEXT MODUL	VM4001 P.C.B., VIDEO	VM4001 PLATINE VIDEO
VM4021	104.452.10	VM4021 11DM VIDEO- UTEXT MODUL	VM4021 P.C.B., VIDEO	VM4021 PLATINE VIDEO
		MOD./KEIN AUSTAUSCH:	**MODULES:**	**PLATINE:**
SCI4000	101.319.80	SCI4000 LTP SCHNITTSTELLE	SCI4000 P.C.B. INTERFACE	PLATINE SCI4000
SCI4000	103.270.50	SCI4000 LTP SCHNITTSTELLE	SCI4000 P.C.B. INTERFACE	SCI4000 PLATINE
SCI4001	103.061.20	SCI4001 LTP SCHNITTSTELLE	SCI4001 P.C.B. INTERFACE	PLATINE SCI4001

Ersatzteile · Spare parts list · Liste de pièces de rechange · Lista parti di ricambio Lista de piezas de recambio

Wichtig: Bei Ersatzteilbestellungen bitte unbedingt die entsprechende Bestellnummer angeben!
N. B.: When demanding Spare Parts it is absolutely necessary to quote the corresponding part number!
Important: Lors d'une commande de pièces de rechange, prière d'indiquer et tout cas le numéro de la pièce!
Importante: Ordinare sempre con il numero correspondenti di codice!
Importante: Pedir siempre los recambios con el numero correspondiente codigo!

Pos.	Art.-Nr Part No. Code	Bezeichnung	Part	Désignation
		CHASSIS-TEILE	**CHASSIS PARTS**	**CHASSIS-PARTIE**
BA005	101.512.40	Buchsen Lautsprecher	Speaker jack	Prise hautparleur
BL001	404.536.00	Stiftleiste 9polig US rot stehend	9 pin contact housing red	Culot a 9 broches rouge
BL002	604.307.76	Stiftleiste 5polig stehend	Contact strip 5-pole	Connecteur male 5 broches
BL003	604.583.90	Stiftleiste 3polig US rot stehend	Contact strip 3-pole red	Connecteur male 3 broches rouge
BL004	102.381.10	Halter Netzleitung (auf LTP.)	Holder	Support
BR002	671.383.10	Stiftleiste 12polig MICS 12 SW	Contact strip 12-pole black	Connecteur male 12 broches
BR004	704.498.10	Stiftleiste 3polig US grün stehend	3 pin contact housing green	Culot a 3 broches vert
BR005	671.379.10	Stiftleiste 4polig MICS4 SW	Contact strip 4-pole black	Connecteur male 4 broches
BR006	671.380.06	Stiftleiste 6polig MICS6 blau	Contact strip 6-pole blue	Connecteur male 6 broches bleu
BS001	905.819.20	Stiftleiste 12polig US stehend	12 pin contact housing	Culot a 12 broches
BS002	110.807.20	Stiftleiste 15polig US stehend	15 pin contact housing	Culot a 15 broches
BV001	508.884.30	Stiftleiste 20polig US	20 pin contact housing	Culot a 20 broches
BV002	508.884.30	Stiftleiste 20polig US	20 pin contact housing	Culot a 20 broches
BY001	110.787.10	Stiftleiste 14polig US	14 pin contact housing	Culot a 14 broches
BY002	905.819.20	Stiftleiste 12polig US stehend	12 pin contact housing	Culot a 12 broches
BZ001	906.172.60	Buchse Euro AV (SCART)	Scart socket	Prise femelle peritelevision
BZ003	671.380.09	Stiftleiste 6polig MICS6 SW	Contact strip 6-pole	Culot a 6 broches
BZ201	704.498.10	Stiftleiste 3polig US grün stehend	3 pin contact housing green	Culot a 3 broches vert
CL003	508.951.20	27N0F 250V 5% Filmkondensator	27N0F 250V 5% Film cap	27N0F 250V 5% Condensateur
CL004	103.429.80	2N7F 2KV 5% Filmkondensator	2N7F 2KV 5% Film cap	2N7F 2KV 5% Condensateur
CL004	103.634.10	3N3F 2KV 5% Filmkondensator	3N3F 2KV 5% Film cap	3N3F 2KV 5% Condensateur
CL004	130.712.70	1N9F 2K0V 5% PP Kondensator	1N9F 2K0V 5% PP cap	1N9F 2K0V 5% C PP
CL007	101.902.40	2U2F 250V Elko	2U2F 250V E cap	2U2F 250V CC
CL013	103.485.30	9N4F 2KV 2,5% Filmkondensator	9N4F 2KV 2,5% Film cap	9N4F 2KV 2,5% Condensateur
CL013	404.065.01	11,6nF 2KV 2,5% Filmkondensator	11,6nF 2KV Film cap	11,6nF 2KV Condensateur film
CL014	100.769.20	33NF 400V 5% Filmkondensator	33NF 400V 5% Film cap	33NF 400V 5% Condensateur
CL014	102.635.40	27N0F 400V 5% Filmkondensator	27N0F 400V 5% Film cap	27N0F 400V 5% Condensateur
CL015	101.807.80	410N0F 400V 5% Filmkondensator	410N0F 400V 5% Film cap	410N0F 400V 5% Condensateur
CL015	103.482.50	460NF 400V 5% Filmkondensator	460NF 400V 5% Film cap	460NF 400V 5% Condensateur
CL015	103.763.60	560N0F 250V 5% Filmkondensator	560N0F 250V 5% Film cap	560N0F 250V 5% Condensateur
CL015	103.792.20	300NF 400V 5% Filmkondensator	300NF 400V 5% Film cap	300NF 400V 5% Condensateur
CL017	433.246.00	12NF 400V KPS-Kondensator	12NF 400V 5% Film cap	12NF 400V 5% Condensateur
CL030	130.707.60	2U2F 160V Elko	2U2F 160V E cap	2U2F 160V CC
CL035	508.951.20	27N0F 250V 5% Filmkondensator	27N0F 250V 5% Film cap	27N0F 250V 5% Condensateur
CL040	101.390.00	680N0F 250V 5% Filmkondensator	680N0F 250V 5% Film cap	680N0F 250V 5% Condensateur film
CL040	430.443.00	470NF 250V 5% MKP-Kondensator	470NF 250V 5% MPoly cap	470NF 250V 5% C PP
CL040	803.058.00	22N0F 400V 5% Filmkondensator	22N0F 400V 5% Film cap	22N0F 400V 5% Condensateur film
CP026	140.352.80	100PF 1KV 20% Keramik-Kondensator	100PF 1KV 20% C cap	100PF 1kV 20% C ceramique
CP050	434.420.00	2N2F 400V 20% Keramik-Kondensator	2N2F 400V C cap	2N2F 400V C ceramique
CP058	203.387.40	1N5F 1KV 10% Keramik-Kondensator	1N5F 1KV 10% C cap	1N5F 1KV 10% C ceramique
CP060	140.352.70	330PF 1KV 10% Keramik-Kondensator	330PF 1KV 10% C cap	330PF 1kV 10% CC
CP061	433.254.00	2N2F 1KV 20% MP Kondensator	2N2F 1KV 20% MPoly cap	2N2F 1KV 20% C PP
CP062	434.248.00	150UF 385V Elko	150UF 385V E cap	150UF 385V CC
CP101	130.710.70	22U0F 250V 50% Elko	22U0F 250V 50% E Cap	22U0F 250V Condens. chimique
CP102	101.888.80	2N2F 400V 10% Filmkondensator	2N2F 400V 10% Film cap	2N2F 400V 10% Condensateur
CP103	102.441.20	100UF 200V 20% Elko	100UF 200V 20% E cap	100UF 200V 20% CC
CP104	140.023.40	470PF 400V 10% Keramik-Kondensator	470PF 400V 10% C cap	470PF 400V 10% C ceramique
CP105	101.888.70	1N0F 400V 10% Filmkondensator	1N0F 400V 10% Film cap	1N0F 400V 10% Condensateur
CP106	140.023.40	470PF 400V 10% Keramik-Kondensator	470PF 400V 10% C cap	470PF 400V 10% C ceramique
CP115	140.023.40	470PF 400V 10% Keramik-Kondensator	470PF 400V 10% C cap	470PF 400V 10% C ceramique

Ersatzteile · Lista de pieza

Wichtig: Bei Er
N. B.: When
Important: Lors
Importante: Ordin
Importante: Pedir

Pos.	Art.-Nr Part No. Code
DA001	160.124.5
DF001	110.707.8
DF002	101.550.3
DF003	101.550.3
DF004	160.124.5
DH001	110.736.9
DL001	160.124.5
DL003	160.124.5
DL005	160.124.5
DL006	440.444.0
DL007	160.124.5
DL008	160.081.2
DL009	102.728.0
DL010	102.728.0
DL012	102.765.5
DL012	102.942.2
DL012	160.092.4
DL013	102.765.5
DL013	102.942.2
DL013	160.086.5
DL014	110.734.5
DL014	508.906.0
DL015	101.300.9
DL016	101.300.9
DL017	704.377.2
DL018	440.092.0
DL019	160.124.5
DL020	160.086.0
DL022	804.441.2
DL023	160.124.5
DL024	704.383.2
DL025	160.125.2
DL026	160.124.5
DL027	160.086.0
DP016	160.081.2
DP017	160.081.2
DP018	160.081.2
DP019	804.441.2
DP021	309.486.2
DP023	160.124.5
DP024	160.124.5
DP025	160.124.5
DP026	101.300.9
DP028	101.300.9
DP029	110.736.9
DP030	160.124.5
DP031	804.440.2
DP032	440.092.0
DP033	160.124.5
DP034	440.092.0
DP041	101.300.9
DP046	160.124.5
DP052	160.124.5
DP053	160.124.5
DP055	160.124.5
DP061	160.095.0
DP062	160.081.2
DP063	160.081.2

ricambio

E PLATINE:
PLATINE
PLATINE
PLATINE
PLATINE
ITE
ITE
TUNER
ATINE
PLATINE VIDEO
ATINE VIDEO
ATINE VIDEO
CI4000
ATINE
CI4001

Ersatzteile · Spare parts list · Liste de pièces de rechange · Lista parti di ricambio Lista de piezas de recambio

Wichtig: Bei Ersatzteilbestellungen bitte unbedingt die entsprechende Bestellnummer angeben!
N.B.: When demanding Spare Parts it is absolutely necessary to quote the corresponding part number!
Important: Lors d'une commande de pièces de rechange, prière d'indiquer et tout cas le numéro de la pièce!
Importante: Ordinare sempre con il numero correspondenti di codice!
Importante: Pedir siempre los recambios con el numero correspondiente codigo!

Pos.	Art.-Nr Part No. Code	Bezeichnung	Part	Désignation
		CHASSIS-TEILE	**CHASSIS PARTS**	**CHASSIS-PARTIE**
BA005	101.512.40	Buchsen Lautsprecher	Speaker jack	Prise hautparleur
BL001	404.536.00	Stiftleiste 9polig US rot stehend	9 pin contact housing red	Culot a 9 broches rouge
BL002	604.307.76	Stiftleiste 5polig stehend	Contact strip 5-pole	Connecteur male 5 broches
BL003	604.583.90	Stiftleiste 3polig US rot stehend	Contact strip 3-pole red	Connecteur male 3 broches rouge
BL004	102.381.10	Halter Netzleitung (auf LTP.)	Holder	Support
BR002	671.383.10	Stiftleiste 12polig MICS 12 SW	Contact strip 12-pole black	Connecteur male 12 broches
BR004	704.498.10	Stiftleiste 3polig US grün stehend	3 pin contact housing green	Culot a 3 broches vert
BR005	671.379.10	Stiftleiste 4polig MICS4 SW	Contact strip 4-pole black	Connecteur male 4 broches
BR006	671.380.06	Stiftleiste 6polig MICS6 blau	Contact strip 6-pole blue	Connecteur male 6 broches bleu
BS001	905.819.20	Stiftleiste 12polig US stehend	12 pin contact housing	Culot a 12 broches
BS002	110.807.20	Stiftleiste 15polig US stehend	15 pin contact housing	Culot a 15 broches
BV001	508.884.30	Stiftleiste 20polig US	20 pin contact housing	Culot a 20 broches
BV002	508.884.30	Stiftleiste 20polig US	20 pin contact housing	Culot a 20 broches
BY001	110.787.10	Stiftleiste 14polig US	14 pin contact housing	Culot a 14 broches
BY002	905.819.20	Stiftleiste 12polig US stehend	12 pin contact housing	Culot a 12 broches
BZ001	906.172.60	Buchse Euro AV (SCART)	Scart socket	Prise femelle peritelevision
BZ003	671.380.09	Stiftleiste 6polig MICS6 SW	Contact strip 6-pole	Culot a 6 broches
BZ201	704.498.10	Stiftleiste 3polig US grün stehend	3 pin contact housing green	Culot a 3 broches vert
CL003	508.951.20	27N0F 250V 5% Filmkondensator	27N0F 250V 5% Film cap	27N0F 250V 5% Condensateur
CL004	103.429.80	2N7F 2KV 5% Filmkondensator	2N7F 2KV 5% Film cap	2N7F 2KV 5% Condensateur
CL004	103.634.10	3N3F 2KV 5% Filmkondensator	3N3F 2KV 5% Film cap	3N3F 2KV 5% Condensateur
CL004	130.712.70	1N9F 2K0V 5% PP Kondensator	1N9F 2K0V 5% PP cap	1N9F 2K0V 5% C PP
CL007	101.902.40	2U2F 250V Elko	2U2F 250V E cap	2U2F 250V CC
CL013	103.485.30	9N4F 2KV 2,5% Filmkondensator	9N4F 2KV 2,5% Film cap	9N4F 2KV 2,5% Condensateur
CL013	404.065.01	11,6nF 2KV 2,5% Filmkondensator	11,6nF 2KV Film cap	11,6nF 2KV Condensateur film
CL014	100.769.20	33NF 400V 5% Filmkondensator	33NF 400V 5% Film cap	33NF 400V 5% Condensateur
CL014	102.635.40	27N0F 400V 5% Filmkondensator	27N0F 400V 5% Film cap	27N0F 400V 5% Condensateur
CL015	101.807.80	410N0F 400V 5% Filmkondensator	410N0F 400V 5% Film cap	410N0F 400V 5% Condensateur
CL015	103.482.50	460NF 400V 5% Filmkondensator	460NF 400V 5% Film cap	460NF 400V 5% Condensateur
CL015	103.763.60	560N0F 250V 5% Filmkondensator	560N0F 250V 5% Film cap	560N0F 250V 5% Condensateur
CL015	103.792.20	300NF 400V 5% Filmkondensator	300NF 400V 5% Film cap	300NF 400V 5% Condensateur
CL017	433.246.00	12NF 400V KPS-Kondensator	12NF 400V 5% Film cap	12NF 400V 5% Condensateur
CL030	130.707.60	2U2F 160V Elko	2U2F 160V E cap	2U2F 160V CC
CL035	508.951.20	27N0F 250V 5% Filmkondensator	27N0F 250V 5% Film cap	27N0F 250V 5% Condensateur
CL040	101.390.00	680N0F 250V 5% Filmkondensator	680N0F 250V 5% Film cap	680N0F 250V 5% Condensateur film
CL040	430.443.00	470NF 250V 5% MKP-Kondensator	470NF 250V 5% MPoly cap	470NF 250V 5% C PP
CL040	803.058.00	22N0F 400V 5% Filmkondensator	22N0F 400V 5% Film cap	22N0F 400V 5% Condensateur film
CP026	140.352.80	100PF 1KV 20% Keramik-Kondensator	100PF 1KV 20% C cap	100PF 1kV 20% C ceramique
CP050	434.420.00	2N2F 400V 20% Keramik-Kondensator	2N2F 400V C cap	2N2F 400V C ceramique
CP058	203.387.40	1N5F 1KV 10% Keramik-Kondensator	1N5F 1KV 10% C cap	1N5F 1KV 10% C ceramique
CP060	140.352.70	330PF 1KV 10% Keramik-Kondensator	330PF 1KV 10% C cap	330PF 1kV 10% CC
CP061	433.254.00	2N2F 1KV 20% MP Kondensator	2N2F 1KV 20% MPoly cap	2N2F 1KV 20% C PP
CP062	434.248.00	150UF 385V Elko	150UF 385V E cap	150UF 385V CC
CP101	130.710.70	22U0F 250V 50% Elko	22U0F 250V 50% E Cap	22U0F 250V Condens. chimique
CP102	101.888.80	2N2F 400V 10% Filmkondensator	2N2F 400V 10% Film cap	2N2F 400V 10% Condensateur
CP103	102.441.20	100UF 200V 20% Elko	100UF 200V 20% E cap	100UF 200V 20% CC
CP104	140.023.40	470PF 400V 10% Keramik-Kondensator	470PF 400V 10% C cap	470PF 400V 10% C ceramique
CP105	101.888.70	1N0F 400V 10% Filmkondensator	1N0F 400V 10% Film cap	1N0F 400V 10% Condensateur
CP106	140.023.40	470PF 400V 10% Keramik-Kondensator	470PF 400V 10% C cap	470PF 400V 10% C ceramique
CP115	140.023.40	470PF 400V 10% Keramik-Kondensator	470PF 400V 10% C cap	470PF 400V 10% C ceramique

Ersatzteile · Spare parts list · Liste de pièces de rechange · Lista parti di ricambio Lista de piezas de recambio

Wichtig: Bei Ersatzteilbestellungen bitte unbedingt die entsprechende Bestellnummer angeben!
N.B.: When demanding Spare Parts it is absolutely necessary to quote the corresponding part number!
Important: Lors d'une commande de pièces de rechange, prière d'indiquer et tout cas le numéro de la pièce!
Importante: Ordinare sempre con il numero correspondenti di codice!
Importante: Pedir siempre los recambios con el numero correspondiente codigo!

Pos.	Art.-Nr Part No. Code	Bezeichnung	Part	Désignation
DA001	160.124.50	LL4148 Diode SMD	LL4148 Diode	LL4148 Diode
DF001	110.707.80	1N4002 Diode	1N4002 Diode	1N4002 Diode
DF002	101.550.30	BAV103 Diode SMD	BAV103 Diode SMD	BAV103 Diode SMD
DF003	101.550.30	BAV103 Diode SMD	BAV103 Diode SMD	BAV103 Diode SMD
DF004	160.124.50	LL4148 Diode SMD	LL4148 Diode	LL4148 Diode
DH001	110.736.90	ZPD33V 0,5W 5% Z-Diode	ZPD33V 0,5W 5% Z-Diode	ZPD33V 0,5W 5% Z-Diode
DL001	160.124.50	LL4148 Diode SMD	LL4148 Diode	LL4148 Diode
DL003	160.124.50	LL4148 Diode SMD	LL4148 Diode	LL4148 Diode
DL005	160.124.50	LL4148 Diode SMD	LL4148 Diode	LL4148 Diode
DL006	440.444.07	BAV21 Diode	BAV21 Diode	BAV21 Diode
DL007	160.124.50	LL4148 Diode SMD	LL4148 Diode	LL4148 Diode
DL008	160.081.20	BA159 Diode	BA159 Diode	BA159 Diode
DL009	102.728.00	RGP15 Diode	RGP15 Diode	RGP15 Diode
DL010	102.728.00	RGP15 Diode	RGP15 Diode	RGP15 Diode
DL012	102.765.50	Silikonscheibe	Silicon plate	Rondelle silicone
DL012	102.942.20	Montageclip 3	Clip 3	Agrafe 3
DL012	160.092.40	DTV32-1500 Diode	DTV32-1500 Diode	DTV32-1500 Diode
DL013	102.765.50	Silikonscheibe	Silicon plate	Rondelle silicone
DL013	102.942.20	Montageclip 3	Clip 3	Agrafe 3
DL013	160.086.50	BYT08P-400A Diode	BYT08P-400A Diode	BYT08P-400A Diode
DL014	110.734.50	BZX55B47 Z-Diode	BZX55B47 Z-Diode	BZX55B47 Z-Diode
DL014	508.906.60	ZPD39 Z-Diode	ZPD39 Z-Diode	ZPD39 Z-Diode
DL015	101.300.90	BA157 Diode	BA157 Diode	BA157 Diode
DL016	101.300.90	BA157 Diode	BA157 Diode	BA157 Diode
DL017	704.377.20	ZPY12 Z-Diode	ZPY12 Z-Diode	ZPY12 Z-Diode
DL018	440.092.09	1N4148 Diode	1N4148 Diode	1N4148 Diode
DL019	160.124.50	LL4148 Diode SMD	LL4148 Diode	LL4148 Diode
DL020	160.086.00	BYT01-200 Diode	BYT01-200 Diode	BYT01-200 Diode
DL022	804.441.20	ZPD2,7 Z-Diode	ZPD2,7 Z-Diode	ZPD2,7 Z-Diode
DL023	160.124.50	LL4148 Diode SMD	LL4148 Diode	LL4148 Diode
DL024	704.383.20	BZX55C47 Z-Diode	BZX55C47 Z-Diode	BZX55C47 Z-Diode
DL025	160.125.30	LL42 Diode SMD	LL42 Diode SMD	LL42 Diode SMD
DL026	160.124.50	LL4148 Diode SMD	LL4148 Diode	LL4148 Diode
DL027	160.086.00	BYT01-200 Diode	BYT01-200 Diode	BYT01-200 Diode
DP016	160.081.60	1N4001 Diode	1N4001 Diode	1N4001 Diode
DP017	160.081.60	1N4001 Diode	1N4001 Diode	1N4001 Diode
DP018	160.081.20	BA159 Diode	BA159 Diode	BA159 Diode
DP019	804.441.20	ZPD2,7 Z-Diode	ZPD2,7 Z-Diode	ZPD2,7 Z-Diode
DP021	309.486.80	ZPD12 2% Z-Diode	ZPD12 2% Z-Diode	ZPD12 2% Z-Diode
DP023	160.124.50	LL4148 Diode SMD	LL4148 Diode	LL4148 Diode
DP024	160.124.50	LL4148 Diode SMD	LL4148 Diode	LL4148 Diode
DP025	160.124.50	LL4148 Diode SMD	LL4148 Diode	LL4148 Diode
DP026	101.300.90	BA157 Diode	BA157 Diode	BA157 Diode
DP028	101.300.90	BA157 Diode	BA157 Diode	BA157 Diode
DP029	110.736.60	ZPD8,2 0,5W Z-Diode	ZPD8,2 0,5W Z-Diode	ZPD8,2 0,5W Z-Diode
DP030	160.124.50	LL4148 Diode SMD	LL4148 Diode	LL4148 Diode
DP031	804.440.20	ZPD15 0,5W 2% Z-Diode	ZPD15 0,5W 2% Z-Diode	ZPD15 0,5W 2% Z-Diode
DP032	440.092.09	1N4148 Diode	1N4148 Diode	1N4148 Diode
DP033	160.124.50	LL4148 Diode SMD	LL4148 Diode	LL4148 Diode
DP034	440.092.09	1N4148 Diode	1N4148 Diode	1N4148 Diode
DP041	101.300.90	BA157 Diode	BA157 Diode	BA157 Diode
DP046	160.124.50	LL4148 Diode SMD	LL4148 Diode	LL4148 Diode
DP052	160.124.50	LL4148 Diode SMD	LL4148 Diode	LL4148 Diode
DP053	160.124.50	LL4148 Diode SMD	LL4148 Diode	LL4148 Diode
DP055	160.124.50	LL4148 Diode SMD	LL4148 Diode	LL4148 Diode
DP061	160.095.80	MUR160 Diode	MUR160 Diode	MUR160 Diode
DP062	160.081.60	1N4001 Diode	1N4001 Diode	1N4001 Diode
DP063	160.081.60	1N4001 Diode	1N4001 Diode	1N4001 Diode

Ersatzteile · Spare parts list · Liste de pièces de rechange · Lista parti di ricambio
Lista de piezas de recambio

Wichtig: Bei Ersatzteilbestellungen bitte unbedingt die entsprechende Bestellnummer angeben!
N. B.: When demanding Spare Parts it is absolutely necessary to quote the corresponding part number!
Important: Lors d'une commande de pièces de rechange, prière d'indiquer et tout cas le numéro de la pièce!
Importante: Ordinare sempre con il numero correspondenti di codice!
Importante: Pedir siempre los recambios con el numero correspondiente codigo!

Pos.	Art.-Nr Part No. Code	Bezeichnung	Part	Désignation
DP064	160.081.60	1N4001 Diode	1N4001 Diode	1N4001 Diode
DP066	160.081.20	BA159 Diode	BA159 Diode	BA159 Diode
DP067	160.081.20	BA159 Diode	BA159 Diode	BA159 Diode
DP068	160.081.20	BA159 Diode	BA159 Diode	BA159 Diode
DP080	160.124.50	LL4148 Diode SMD	LL4148 Diode	LL4148 Diode
DP084	101.300.90	BA157 Diode	BA157 Diode	BA157 Diode
DP086	101.300.90	BA157 Diode	BA157 Diode	BA157 Diode
DP101	160.081.20	BA159 Diode	BA159 Diode	BA159 Diode
DP102	160.081.20	BA159 Diode	BA159 Diode	BA159 Diode
DP103	102.981.60	RGP50M Diode	RGP50M Diode	RGP50M Diode
DP104	103.602.80	MUR1100 Diode	MUR1100 Diode	MUR1100 Diode
DP106	160.081.20	BA159 Diode	BA159 Diode	BA159 Diode
DP107	101.300.90	BA157 Diode	BA157 Diode	BA157 Diode
DP108	102.548.30	Montageclip	Clip metal	Agrafe
DP108	160.091.40	BYW29-150 Diode	BYW29-150 Diode	BYW29-150 Diode
DP109	160.091.40	BYW29-150 Diode	BYW29-150 Diode	BYW29-150 Diode
DP109	610.424.00	Silikonscheibe	Silicon plate	Rondelle silicone
DP115	160.081.60	1N4001 Diode	1N4001 Diode	1N4001 Diode
DP116	102.942.20	Montageclip 3	Clip 3	Agrafe 3
DP116	160.091.40	BYW29-150 Diode	BYW29-150 Diode	BYW29-150 Diode
DP117	440.092.09	1N4148 Diode	1N4148 Diode	1N4148 Diode
DP118	103.405.10	SB360 Diode	SB360 Diode	SB360 Diode
DP121	160.124.50	LL4148 Diode SMD	LL4148 Diode	LL4148 Diode
DP122	160.124.50	LL4148 Diode SMD	LL4148 Diode	LL4148 Diode
DP124	160.124.50	LL4148 Diode SMD	LL4148 Diode	LL4148 Diode
DP126	160.124.50	LL4148 Diode SMD	LL4148 Diode	LL4148 Diode
DP127	440.092.09	1N4148 Diode	1N4148 Diode	1N4148 Diode
DP128	160.124.50	LL4148 Diode SMD	LL4148 Diode	LL4148 Diode
DP136	160.124.50	LL4148 Diode SMD	LL4148 Diode	LL4148 Diode
DP138	160.124.50	LL4148 Diode SMD	LL4148 Diode	LL4148 Diode
DP139	160.124.50	LL4148 Diode SMD	LL4148 Diode	LL4148 Diode
DP140	160.124.50	LL4148 Diode SMD	LL4148 Diode	LL4148 Diode
DP141	160.124.50	LL4148 Diode SMD	LL4148 Diode	LL4148 Diode
DP142	160.124.50	LL4148 Diode SMD	LL4148 Diode	LL4148 Diode
DP147	160.124.50	LL4148 Diode SMD	LL4148 Diode	LL4148 Diode
DP148	160.124.50	LL4148 Diode SMD	LL4148 Diode	LL4148 Diode
DP149	440.092.09	1N4148 Diode	1N4148 Diode	1N4148 Diode
DP153	160.124.50	LL4148 Diode SMD	LL4148 Diode	LL4148 Diode
DP154	160.124.50	LL4148 Diode SMD	LL4148 Diode	LL4148 Diode
DP155	160.124.50	LL4148 Diode SMD	LL4148 Diode	LL4148 Diode
DP160	160.124.50	LL4148 Diode SMD	LL4148 Diode	LL4148 Diode
DP162	160.124.50	LL4148 Diode SMD	LL4148 Diode	LL4148 Diode
DP163	160.124.50	LL4148 Diode SMD	LL4148 Diode	LL4148 Diode
DR001	704.382.00	ZPD5,6 0,5W 2% Z-Diode	ZPD5,6 0,5W 2% Z-Diode	ZPD5,6 0,5W 2% Z-Diode
DR002	160.124.50	LL4148 Diode SMD	LL4148 Diode	LL4148 Diode
DZ019	160.124.50	LL4148 Diode SMD	LL4148 Diode	LL4148 Diode
DZ020	160.124.50	LL4148 Diode SMD	LL4148 Diode	LL4148 Diode
DZ031	101.550.30	BAV103 Diode SMD	BAV103 Diode SMD	BAV103 Diode SMD
DZ034	101.550.30	BAV103 Diode SMD	BAV103 Diode SMD	BAV103 Diode SMD
DZ043	101.550.30	BAV103 Diode SMD	BAV103 Diode SMD	BAV103 Diode SMD
DZ044	101.550.30	BAV103 Diode SMD	BAV103 Diode SMD	BAV103 Diode SMD
DZ071	160.124.50	LL4148 Diode SMD	LL4148 Diode	LL4148 Diode
DZ200	160.125.30	LL42 Diode SMD	LL42 Diode SMD	LL42 Diode SMD
DZ201	160.124.50	LL4148 Diode SMD	LL4148 Diode	LL4148 Diode
IA001	102.548.30	Montageclip	Clip metal	Agrafe
IA001	110.906.90	TDA2052 IC	TDA2052 IC	TDA2052 CI
IA002	110.906.90	TDA2052 IC	TDA2052 IC	TDA2052 CI

Ersatzteile · Spare parts list · Liste de pièces de rechange · Lista parti di ricambio
Lista de piezas de recambio

Wichtig: Bei Ersatzteilbestellungen bitte unbedingt die entsprechende Bestellnummer angeben!
N. B.: When demanding Spare Parts it is absolutely necessary to quote the corresponding part number!
Important: Lors d'une commande de pièces de rechange, prière d'indiquer et tout cas le numéro de la pièce!
Importante: Ordinare sempre con il numero correspondenti di codice!
Importante: Pedir siempre los recambios con el numero correspondiente codigo!

Pos.	Art.-Nr Part No. Code	Bezeichnung	Part	Désignation
IF001	102.130.70	TL082BCN IC	TL082CP IC	TL082CP CI
IF002	101.760.50	STV9379F IC	STV9379F IC	STV9379F IC
IF002	102.548.30	Montageclip	Clip metal	Agrafe
IF002	102.765.50	Silikonscheibe	Silicon plate	Rondelle silicone
IL001	101.473.20	TDA9151B/N3C IC	TDA9151B/N3C IC	TDA9151B/N3C CI
IP060	905.424.70	TEA2261 IC	TEA2261 IC	TEA2261 CI
IP116	102.548.30	Montageclip	Clip metal	Agrafe
IP116	102.962.10	L7812ACV IC	L7812ACV IC	L7812ACV CI
IP116	601.186.00	L4940/V12 IC	L4940/V12 IC	L4940/V12 CI
IP117	102.548.30	Montageclip	Clip metal	Agrafe
IP117	704.014.02	AN7809/MC7809 IC	AN7809/MC7809 IC	AN7809/MC7809 IC
IP118	102.548.30	Montageclip	Clip metal	Agrafe
IP118	103.418.50	L4940V5 IC	L4940V5 IC	L4940V5 CI
IP118	460.074.00	MC7805/ACT 2% IC	MC7805/ACT 2% IC	MC7805/ACT 2% CI
IP120	904.383.00	TEA5170 IC	TEA5170 IC	TEA5170 CI
IP160	460.699.00	LM393 IC	LM393 IC	LM393 CI
IR001	101.161.30	ST90R91BC1 IC	ST90R91BC1 IC	ST90R91BC1 CI
IR001	676.269.00	68polig IC-Fassung	68pole IC socket	68voies Support CI
IR002	102.272.80	M27C4001-120XF1 IC UNPROG.	M27C4001-120XF1 IC	M27C4001-120XF1 CI
IR002	804.077.71	32polig IC-Fassung	IC socket 32pole	Support CI 32 voies
IR003	100.971.00	ST24C16C/B UNPROG.	ST24C16C/B IC	ST24C16C/B CI
IR004	460.347.00	MC14094/BCP IC	MC14094/BCP IC	MC14094/BCP CI
IR006	460.252.00	UA7805CSP/MC7805 IC	UA7805CSP IC	UA7805CSP CI
IZ001	100.993.00	TEA6417B IC	TEA6417B IC	TEA6417B CI
IZ200	101.288.60	TEA6422 IC	TEA6422 IC	TEA6422 CI
LH003	130.510.90	12U0H Drossel	12U0H 10% Choke coil	12U0H 10% Self
LL001	101.479.40	Impulsübertrager	Pulse transformer	Transformateur d'impulsions
LL002	101.532.70	Kombi-Spule	Combi coil	Bobine
LL003	101.532.50 S	3U7H Spule H-Linearität	3U7H H-Linearity coil	3U7H Bobine linearite
LL003	101.532.60 S	4U2H Spule H-Linearität	4U2H H-Linearity coil	4U2H Bobine linearite
LL003	103.839.60 S	9UH Spule H-Linearität	9UH H-Linearity coil	9UH Bobine linearite
LL004	101.542.70 S	130U0H 5% Drossel	130U0H 5% Choke coil	130U0H 5% Self
LL004	103.476.50 S	4MI0H 10% Drossel Ost-West-Spule	4MI0H 10% Choke coil E.-W.-Coil	4MI0H 10% Self
LL004	103.485.40 S	110U0H 5% Drossel	110U0H 5% Choke coil	110U0H 5% Self
LL008	103.401.60 S	Diodensplit-Trafo GDS35	Diode split transformer	Transformateur THT
LL008	103.401.70 S	Diodensplit-Trafo GDS35	Diode split transformer	Transformateur THT
LL008	103.401.80 S	Diodensplit-Trafo GDS35	Diode split transformer	Transformateur THT
LL008	103.401.90 S	Diodensplit-Trafo GDS35	Diode split transformer	Transformateur THT
LL008	103.402.10 S	Diodensplit-Trafo GDS35	Diode split transformer	Transformateur THT
LL009	204.720.80	22UH Spule	22UH Coil	22UH Bobine
LL010	103.476.60	Transformator Ost-West	Transformer East-West	Transformateur
LP020	101.451.70 S	Trafo Schaltnetzteil SMT1	Switched mode power transformer	Transformateur d'alimentation
LP060	103.320.90 S	Trafo Schaltnetzteil SMT89	Switched mode power transformer	Transformateur d'alimentation
LP060	103.321.20 S	Trafo Schaltnetzteil SMT89	Switched mode power transformer	Transformateur d'alimentation
LP060	103.321.30 S	Trafo Schaltnetzteil SMT89	Switched mode power transformer	Transformateur d'alimentation
LP060	103.321.50 S	Trafo Schaltnetzteil SMT89	Switched mode power transformer	Transformateur d'alimentation
LP071	130.792.00	4U0H 10% Drossel	4U0H 10% Choke coil	4U0H 10% Self
LP080	604.120.91 S	Treibertransformator	Driver transformer	Transformateur
LP102	204.390.00	300U0H Drossel	300U0H Choke coil	300U0H Self
LR002	103.730.60	390NH Spule SMD	390NH Coil SMD	390NH Bobine SMD
LR003	140.377.70	10UOH 10% LF-SMD	10UH 10% Coil SMD	10UH 10% Bobine SMD
LR004	103.730.60	390NH Spule SMD	390NH Coil SMD	390NH Bobine SMD
PP120	102.603.50	470R Trimmwiderstand liegend	470R Trimmer resistor	470R Resistance ajustable

Ersatzteile · S
Lista de piezas

Wichtig: Bei Ersa
N. B.: When d
Important: Lors d'u
Importante: Ordinar
Importante: Pedir si

Pos.	Art.-Nr Part No. Code
QR001	101.191.40
RA013	102.263.10
RA014	102.263.10
RF001	130.108.20
RF003	150.193.30
RF004	130.639.50
RF010	150.172.60
RF010	411.051.01
RF011	130.639.60
RF013	130.108.20
RH012	150.098.70
RH013	150.097.30
RH020	130.468.20
RL010	150.208.00
RL026	101.477.40
RL026	102.072.90
RL026	102.242.50
RL026	102.243.20
RL026	104.037.10
RL028	130.002.30
RL029	100.094.20
RL036	204.700.40
RL038	150.226.00
RL038	150.226.50
RL056	102.332.20
RP015	102.300.30
RP050	100.743.20
RP056	150.095.80
RP061	100.094.20
RP073	101.457.90
RP102	130.575.80
RP107	130.007.80
RZ011	150.095.80
RZ013	150.095.80
RZ015	150.095.80
RZ017	150.095.80
RZ019	150.096.30
RZ073	150.182.30
RZ076	150.210.00
TA001	309.466.60
TF001	102.548.30
TF001	102.765.50
TF001	160.018.80
TF002	102.548.30
TF002	102.765.50
TF002	160.019.40
TF003	160.063.30
TH001	450.617.85
TH004	160.063.30
TH005	450.617.85
TH006	160.063.30

cambio

% Z-Diode

SMD
SMD
SMD
SMD

D

Ersatzteile · Spare parts list · Liste de pièces de rechange · Lista parti di ricambio
Lista de piezas de recambio

Wichtig: Bei Ersatzteilbestellungen bitte unbedingt die entsprechende Bestellnummer angeben!
N. B.: When demanding Spare Parts it is absolutely necessary to quote the corresponding part number!
Important: Lors d'une commande de pièces de rechange, prière d'indiquer et tout cas le numéro de la pièce!
Importante: Ordinare sempre con il numero correspondenti di codice!
Importante: Pedir siempre los recambios con el numero correspondiente codigo!

Pos.	Art.-Nr Part No. Code		Bezeichnung	Part	Désignation
IF001	102.130.70		TL082BCN IC	TL082CP IC	TL082CP CI
IF002	101.760.50		STV9379F IC	STV9379F IC	STV9379F IC
IF002	102.548.30		Montageclip	Clip metal	Agrafe
IF002	102.765.50		Silikonscheibe	Silicon plate	Rondelle silicone
IL001	101.473.20		TDA9151B/N3C IC	TDA9151B/N3C IC	TDA9151B/N3C CI
IP060	905.424.70		TEA2261 IC	TEA2261 IC	TEA2261 CI
IP116	102.548.30		Montageclip	Clip metal	Agrafe
IP116	102.962.10		L7812ACV IC	L7812ACV IC	L7812ACV CI
IP116	601.186.00		L4940/V12 IC	L4940/V12 IC	L4940/V12 CI
IP117	102.548.30		Montageclip	Clip metal	Agrafe
IP117	704.014.02		AN7809/MC7809 IC	AN7809/MC7809 IC	AN7809/MC7809 IC
IP118	102.548.30		Montageclip	Clip metal	Agrafe
IP118	103.418.50		L4940V5 IC	L4940V5 IC	L4940V5 CI
IP118	460.074.00		MC7805/ACT 2% IC	MC7805/ACT 2% IC	MC7805/ACT 2% CI
IP120	904.383.00		TEA5170 IC	TEA5170 IC	TEA5170 CI
IP160	460.699.00		LM393 IC	LM393 IC	LM393 CI
IR001	101.161.30		ST90R91BC1 IC	ST90R91BC1 IC	ST90R91BC1 CI
IR001	676.269.00		68polig IC-Fassung	68pole IC socket	68voies Support CI
IR002	102.272.80		M27C4001-120XF1 IC UNPROG.	M27C4001-120XF1 IC	M27C4001-120XF1 CI
IR002	804.077.71		32polig IC-Fassung	IC socket 32pole	Support CI 32 voies
IR003	100.971.00		ST24C16C/B UNPROG.	ST24C16C/B IC	ST24C16C/B CI
IR004	460.347.00		MC14094/BCP IC	MC14094/BCP IC	MC14094/BCP CI
IR006	460.252.00		UA7805CSP/MC7805 IC	UA7805CSP IC	UA7805CSP CI
IZ001	100.993.00		TEA6417B IC	TEA6417B IC	TEA6417B CI
IZ200	101.288.60		TEA6422 IC	TEA6422 IC	TEA6422 CI
LH003	130.510.90		12U0H Drossel	12U0H 10% Choke coil	12U0H 10% Self
LL001	101.479.40		Impulsübertrager	Pulse transformer	Transformateur d'impulsions
LL002	101.532.70		Kombi-Spule	Combi coil	Bobine
LL003	101.532.50	S	3U7H Spule H-Linearität	3U7H H-Linearity coil	3U7H Bobine linearite
LL003	101.532.60	S	4U2H Spule H-Linearität	4U2H H-Linearity coil	4U2H Bobine linearite
LL003	103.839.60	S	9UH Spule H-Linearität	9UH H-Linearity coil	9UH Bobine linearite
LL004	101.542.70	S	130U0H 5% Drossel	130U0H 5% Choke coil	130U0H 5% Self
LL004	103.476.50	S	4MI0H 10% Drossel Ost-West-Spule	4MI0H 10% Choke coil E.-W.-Coil	4MI0H 10% Self
LL004	103.485.40	S	110U0H 5% Drossel	110U0H 5% Choke coil	110U0H 5% Self
LL008	103.401.60	S	Diodensplit-Trafo GDS35	Diode split transformer	Transformateur THT
LL008	103.401.70	S	Diodensplit-Trafo GDS35	Diode split transformer	Transformateur THT
LL008	103.401.80	S	Diodensplit-Trafo GDS35	Diode split transformer	Transformateur THT
LL008	103.401.90	S	Diodensplit-Trafo GDS35	Diode split transformer	Transformateur THT
LL008	103.402.10	S	Diodensplit-Trafo GDS35	Diode split transformer	Transformateur THT
LL009	204.720.80		22UH Spule	22UH Coil	22UH Bobine
LL010	103.476.60		Transformator Ost-West	Transformer East-West	Transformateur
LP020	101.451.70	S	Trafo Schaltnetzteil SMT1	Switched mode power transformer	Transformateur d'alimentation
LP060	103.320.90	S	Trafo Schaltnetzteil SMT89	Switched mode power transformer	Transformateur d'alimentation
LP060	103.321.20	S	Trafo Schaltnetzteil SMT89	Switched mode power transformer	Transformateur d'alimentation
LP060	103.321.30	S	Trafo Schaltnetzteil SMT89	Switched mode power transformer	Transformateur d'alimentation
LP060	103.321.50	S	Trafo Schaltnetzteil SMT89	Switched mode power transformer	Transformateur d'alimentation
LP071	130.792.00		4U0H 10% Drossel	4U0H 10% Choke coil	4U0H 10% Self
LP080	604.120.91	S	Treibertransformator	Driver transformer	Transformateur
LP102	204.390.00		300U0H Drossel	300U0H Choke coil	300U0H Self
LR002	103.730.60		390NH Spule SMD	390NH Coil SMD	390NH Bobine SMD
LR003	140.377.70		10UOH 10% LF-SMD	10UH 10% Coil SMD	10UH 10% Bobine SMD
LR004	103.730.60		390NH Spule SMD	390NH Coil SMD	390NH Bobine SMD
PP120	102.603.50		470R Trimmwiderstand liegend	470R Trimmer resistor	470R Resistance ajustable

Ersatzteile · Spare parts list · Liste de pièces de rechange · Lista parti di ricambio
Lista de piezas de recambio

Wichtig: Bei Ersatzteilbestellungen bitte unbedingt die entsprechende Bestellnummer angeben!
N. B.: When demanding Spare Parts it is absolutely necessary to quote the corresponding part number!
Important: Lors d'une commande de pièces de rechange, prière d'indiquer et tout cas le numéro de la pièce!
Importante: Ordinare sempre con il numero correspondenti di codice!
Importante: Pedir siempre los recambios con el numero correspondiente codigo!

Pos.	Art.-Nr Part No. Code		Bezeichnung	Part	Désignation
QR001	101.191.40		22M0HZ Quarz	22M0HZ Crystal	22M0HZ Quartz
RA013	102.263.10	S	4R7 0,5W 5% Sicherheitswiderstand	4R7 0,5W 5% Fusible resistor	4R7 0,5W 5% Résistance fusible
RA014	102.263.10	S	4R7 0,5W 5% Sicherheitswiderstand	4R7 0,5W 5% Fusible resistor	4R7 0,5W 5% Résistance fusible
RF001	130.108.20		1R21 0,7W 1% Metallfilmwiderstand	1R21 0,7W 1% Metal film resistor	1R21 0,7W 1% Resistance metall.
RF003	150.193.30		562R0 0,4W 1% Metallfilmwiderstand	562R0 0,4W 1% Metal film resistor	562R0 0,4W 1% Resistance metall.
RF004	130.639.50	S	1R5 0,3W 5% Sicherheitswiderstand	1R5 0,3W 5% Fusible resistor	1R5 0,3W 5% Résistance fusible
RF010	150.172.60		3K3R 0,4W 2% Metallfilmwiderstand	3K3R 0,4W 2% Metal film resistor	3K3R 0,4W 2% Resistance metall.
RF010	411.051.01		1KR 0,4W 2% Metallfilmwiderstand	1KR 0,4W 2% Metal film resistor	1KR 0,4W 2% Resistance metall.
RF011	130.639.60		330K 0,25W 1% Metallfilmwiderstand	330K 0,25W 1% Metal film resistor	330K 0,25W 1% Resistance metall.
RF013	130.108.20		1R21 0,7W 1% Metallfilmwiderstand	1R21 0,7W 1% Metal film resistor	1R21 0,7W 1% Resistance metall.
RH012	150.098.70	S	2R2 0,3W 5% Sicherheitswiderstand	2R2 0,3W 5% Fusible resistor	2R2 0,3W 5% Résistance fusible
RH013	150.097.30	S	1R 0,3W 5% Sicherheitswiderstand	1R 0,3W 5% Fusible resistor	1R 0,3W 5% Résistance fusible
RH020	130.468.20		1K2R 0,4W 2% Metallfilmwiderstand	1K2R 0,4W 2% Metal film resistor	1K2R 0,4W 2% Resistance metall.
RL010	150.208.00		71K5 0,25W 1% Metallfilmwiderstand	71K5 0,25W 1% Metal film resistor	71K5 0,25W 1% Resistance metall.
RL026	101.477.40		68K1R 0,7W 1% Metallfilmwiderstand	68K1R 0,7W 1% Metal film resistor	68K1R 0,7W 1% Resistance metall.
RL026	102.072.90		52K3 0,7W 1% Metallfilmwiderstand	52K3 0,7W 1% Metal film resistor	52K3 0,7W 1% Resistance metall.
RL026	102.242.50		51K1R 0,7W 1% Metallfilmwiderstand	51K1R 0,7W 1% Metal film resistor	51K1R 0,7W 1% Resistance metall.
RL026	102.243.20		54K9 0,7W 1% Metallfilmwiderstand	54K9 0,7W 1% Metal film resistor	54K9 0,7W 1% Resistance metall.
RL026	104.037.10		46K4R 0,7W 1% Metallfilmwiderstand	46K4R 0,7W 1% Metal film resistor	46K4R 0,7W 1% Resistance metall.
RL028	130.002.30	S	1K5R 0,7W 5% Sicherheitswiderstand	1K5R 0,7W 5% Fusible resistor	1K5R 0,7W 5% Résistance fusible
RL029	100.094.20		270R 10W 10% Drahtwiderstand	270R 10W 10% Wire resistor	270R 10W 10% Resistance bobine
RL036	204.700.40		1KR 0,25W 1% Metallfilmwiderstand	1KR 0,25W 1% Metal film resistor	1KR 0,25W 1% Resistance metall.
RL038	150.226.00	S	R270 0,4W 10% Sicherheitswiderstand	R270 0,4W 10% Fusible resistor	R270 0,4W 10% Resistance fusible
RL038	150.226.50	S	R470 0,4W 10% Sicherheitswiderstand	R470 0,4W 10% Fusible resistor	R470 0,4W 10% Resistance fusible
RL056	102.332.20		47R 0,5W 5% Widerstand	47R 0,5W 5% Resistor agglom.	47R 0,5W 5% Resistance
RP015	102.300.30		100R 0,75W 5% Drahtwiderstand	100R 0,75W 5% Wire resistor	100R 0,75W 5% Resistance bobine
RP050	100.743.20		10M 0,7W 5% Schichtwiderstand	10M 0,7W 5% Film resistor	10M 0,7W 5% Resistance a couche
RP056	150.095.80	S	10R 0,3W 5% Sicherheitswiderstand	10R 0,3W 5% Fusible resistor	10R 0,3W 5% Resistance fusible
RP061	100.094.20		270R 10W 10% Drahtwiderstand	270R 10W 10% Wire resistor	270R 10W 10% Resistance bobine
RP073	101.457.90		10R 3W 5% Drahtwiderstand	10R 3W 5% Wire resistor	10R 3W 5% Resistance bobine
RP102	130.575.80		4K7 2W 5% Metalloxidwiderstand	4K7 2W 5% Metal oxide resistor	4K7 2W 5% Resistance metallique
RP107	130.007.80	S	0R68 0,3W 5% Sicherheitswiderstand	0R68 0,3W 5% Fusible resistor	0R68 0,3W 5% Résistance fusible
RZ011	150.095.80	S	10R 0,3W 5% Sicherheitswiderstand	10R 0,3W 5% Fusible resistor	10R 0,3W 5% Resistance fusible
RZ013	150.095.80	S	10R 0,3W 5% Sicherheitswiderstand	10R 0,3W 5% Fusible resistor	10R 0,3W 5% Resistance fusible
RZ015	150.095.80	S	10R 0,3W 5% Sicherheitswiderstand	10R 0,3W 5% Fusible resistor	10R 0,3W 5% Resistance fusible
RZ017	150.095.80	S	10R 0,3W 5% Sicherheitswiderstand	10R 0,3W 5% Fusible resistor	10R 0,3W 5% Resistance fusible
RZ019	150.096.30	S	15R 0,3W 5% Sicherheitswiderstand	15R 0,3W 5% Fusible resistor	15R 0,3W 5% Résistance fusible
RZ073	150.182.30		464R 0,4W 1% Metallfilmwiderstand	464R 0,4W 1% Metal film resistor	464R 0,4W 1% Resistance metall.
RZ076	150.210.00		75R 0,4W 1% Metallfilmwiderstand	75R 0,4W 1% Metal film resistor	75R 0,4W 1% Resistance metall.
TA001	309.466.60		BC857B Transistor SMD	BC857B Transistor	BC857B Transistor
TF001	102.548.30		Montageclip	Clip metal	Agrafe
TF001	102.765.50		Silikonscheibe	Silicon plate	Rondelle silicone
TF001	160.018.80		BD241C Transistor	BD241C Transistor	BD241C Transistor
TF002	102.548.30		Montageclip	Clip metal	Agrafe
TF002	102.765.50		Silikonscheibe	Silicon plate	Rondelle silicone
TF002	160.019.40		BD242C Transistor	BD242C Transistor	BD242C Transistor
TF003	160.063.30		BC858B Transistor SMD	BC858B Transistor	BC858B Transistor
TH001	450.617.85		BC848B Transistor SMD	BC848B Transistor	BC848B Transistor
TH004	160.063.30		BC858B Transistor SMD	BC858B Transistor	BC858B Transistor
TH005	450.617.85		BC848B Transistor SMD	BC848B Transistor	BC848B Transistor
TH006	160.063.30		BC858B Transistor SMD	BC858B Transistor	BC858B Transistor

Ersatzteile · Spare parts list · Liste de pièces de rechange · Lista parti di ricambio Lista de piezas de recambio

Wichtig: Bei Ersatzteilbestellungen bitte unbedingt die entsprechende Bestellnummer angeben!
N.B.: When demanding Spare Parts it is absolutely necessary to quote the corresponding part number!
Important: Lors d'une commande de pièces de rechange, prière d'indiquer et tout cas le numéro de la pièce!
Importante: Ordinare sempre con il numero correspondenti di codice!
Importante: Pedir siempre los recambios con el numero correspondiente codigo!

Pos.	Art.-Nr Part No. Code	Bezeichnung	Part	Désignation
TL001	450.617.85	BC848B Transistor SMD	BC848B Transistor	BC848B Transistor
TL002	450.617.85	BC848B Transistor SMD	BC848B Transistor	BC848B Transistor
TL003	102.765.50	Silikonscheibe	Silicon plate	Rondelle silicone
TL003	102.942.20	Montageclip 3	Clip 3	Agrafe 3
TL003	160.019.20	BD242 Transistor	BD242 Transistor	BD242 Transistor
TL004	102.505.50	ON4914 Transistor	ON4914 Transistor	ON4914 Transistor
TL004	102.548.30	Montageclip	Clip metal	Agrafe
TL004	502.814.00	Silikonscheibe	Silicon plate	Rondelle silicone
TL005	160.013.40	MPS750 Transistor	MPS750 Transistor	MPS750 Transistor
TL006	704.365.20	MPSW01A Transistor	MPSW01A Transistor	MPSW01A Transistor
TL007	160.062.30	BC817-16 Transistor	BC817-16 Transistor	BC817-16 Transistor
TL008	450.617.85	BC848B Transistor SMD	BC848B Transistor	BC848B Transistor
TL009	704.012.05	BC817-25 Transistor SMD	BC817-25 Transistor	BC817-25 Transistor
TP020	160.046.10	BUT11AF Transistor	BUT11AF Transistor	BUT11AF Transistor
TP021	450.617.85	BC848B Transistor SMD	BC848B Transistor	BC848B Transistor
TP023	450.617.85	BC848B Transistor SMD	BC848B Transistor	BC848B Transistor
TP026	450.617.85	BC848B Transistor SMD	BC848B Transistor	BC848B Transistor
TP051	450.014.66	BC337-40 Transistor	BC337-40 Transistor	BC337-40 Transistor
TP060	102.243.70	BUL810TH Transistor	BUL810TH Transistor	BUL810TH Transistor
TP060	102.548.30	Montageclip	Clip metal	Agrafe
TP060	502.814.00	Silikonscheibe	Silicon plate	Rondelle silicone
TP121	450.617.85	BC848B Transistor SMD	BC848B Transistor	BC848B Transistor
TP122	450.617.85	BC848B Transistor SMD	BC848B Transistor	BC848B Transistor
TP131	160.063.30	BC858B Transistor SMD	BC858B Transistor	BC858B Transistor
TP132	450.617.85	BC848B Transistor SMD	BC848B Transistor	BC848B Transistor
TP134	450.617.85	BC848B Transistor SMD	BC848B Transistor	BC848B Transistor
TP136	450.617.85	BC848B Transistor SMD	BC848B Transistor	BC848B Transistor
TP144	450.617.85	BC848B Transistor SMD	BC848B Transistor	BC848B Transistor
TP150	450.617.85	BC848B Transistor SMD	BC848B Transistor	BC848B Transistor
TP151	160.063.30	BC858B Transistor SMD	BC858B Transistor	BC858B Transistor
TR001	160.063.00	BC848C Transistor SMD	BC848C Transistor SMD	BC848C Transistor SMD
TR002	160.063.00	BC848C Transistor SMD	BC848C Transistor SMD	BC848C Transistor SMD
TR003	160.063.00	BC848C Transistor SMD	BC848C Transistor SMD	BC848C Transistor SMD
TR005	160.063.00	BC848C Transistor SMD	BC848C Transistor SMD	BC848C Transistor SMD
TX001	160.063.30	BC858B Transistor SMD	BC858B Transistor	BC858B Transistor
TX005	160.063.30	BC858B Transistor SMD	BC858B Transistor	BC858B Transistor
TZ001	450.617.85	BC848B Transistor SMD	BC848B Transistor	BC848B Transistor
TZ002	160.008.50	BC546B Transistor	BC546B Transistor	BC546B Transistor
TZ003	450.617.85	BC848B Transistor SMD	BC848B Transistor	BC848B Transistor
TZ004	450.617.85	BC848B Transistor SMD	BC848B Transistor	BC848B Transistor
TZ005	160.008.50	BC546B Transistor	BC546B Transistor	BC546B Transistor
TZ006	160.008.50	BC546B Transistor	BC546B Transistor	BC546B Transistor
TZ007	450.617.85	BC848B Transistor SMD	BC848B Transistor	BC848B Transistor
TZ008	450.617.85	BC848B Transistor SMD	BC848B Transistor	BC848B Transistor
TZ061	450.617.85	BC848B Transistor SMD	BC848B Transistor	BC848B Transistor
TZ062	160.063.30	BC858B Transistor SMD	BC858B Transistor	BC858B Transistor
TZ063	160.063.30	BC858B Transistor SMD	BC858B Transistor	BC858B Transistor
TZ064	450.617.85	BC848B Transistor SMD	BC848B Transistor	BC848B Transistor
-	101.413.30	Modulhalter VM	Module holder	Support plastique
-	101.458.30	Halter TP060	Holder	Support
-	102.231.70	Modulhalter AM/FM	Module holder	Support plastique
-	102.845.50	Halter Sub	Holder Sub	Support Sub
-	103.011.70	Modulhalter Dolby	Module holder	Support plastique

Ersatzteile · Spare parts list · Liste de pièces de rechange · Lista parti di ricambio Lista de piezas de recambio

Wichtig: Bei Ersatzteilbestellungen bitte unbedingt die entsprechende Bestellnummer angeben!
N.B.: When demanding Spare Parts it is absolutely necessary to quote the corresponding part number!
Important: Lors d'une commande de pièces de rechange, prière d'indiquer et tout cas le numéro de la pièce!
Importante: Ordinare sempre con il numero correspondenti di codice!
Importante: Pedir siempre los recambios con el numero correspondiente codigo!

Pos.	Art.-Nr Part No. Code	Bezeichnung	Part	Désignation
		SUB VPROT 4000	**SUB VPROT 4000**	**SUB VPROT 4000**
SUB RF008	102.840.10	SUB VPROT 4000	SUB VPROT 4000	SUB VPROT 4000
DF100	440.092.09	1N4148 Diode	1N4148 Diode	1N4148 Diode
DF101	440.092.09	1N4148 Diode	1N4148 Diode	1N4148 Diode
RF108	101.624.20	Widerstandsnetzwerk X 4	Resistor network X 4	Ens. resistif X 4
TF100	160.011.10	BC558B Transistor	BC558B Transistor	BC558B Transistor
		SUB SAT 4001	**SUB SAT 4001**	**SUB SAT 4001**
SUB SAT	102.495.40	SUB SAT 4001	SUB SAT 4001	SUB SAT 4001
BX06	671.380.15	Stiftleiste 6polig rot	Contact strip 6-pole red	Connecteur male 6 broches rouge
DX80	804.441.60	ZPD10 0,5W Z-Diode 2%	ZPD10 0,5W Z-Diode 2%	ZPD10 0,5W Z-Diode 2%
DX81	440.092.09	1N4148 Diode	1N4148 Diode	1N4148 Diode
IX80	460.067.00	MC14053B/HEF4053B IC	MC14053B/HEF4053B IC	MC14053B/HEF4053B CI
RX80	150.100.20 S	4R7 0,3W 5% Sicherheitswiderstand	4R7 0,3W 5% Fusible resistor	4R7 0,3W 5% Résistance fusible
RX82	150.185.80	4K12R 0,4W 1% Metallfilmwiderstand	4K12R 0,4W 1% Metal film resistor	4K12R 0,4W 1% Resistance metall.
RX83	150.186.20	4K32R 0,4W 1% Metallfilmwiderstand	4K32R 0,4W 1% Metal film resistor	4K32R 0,4W 1% Resistance metall.
TX80	450.014.66	BC337-40 Transistor	BC337-40 Transistor	BC337-40 Transistor

LIST OF ABBREVIATIONS - LISTE DES ABREVIATIONS - ABKÜRZUNGEN
LISTA DELLE ABBREVIAZIONI - LISTA DE ABREVIACIONES

● **BCL**	BEAM CURRENT INFORMATION
● **BG INFO**	SWITCH BG
● **BLK**	BLANKING
● **B-SC/PIP**	BLUE SIGNAL FROM SCART/PIP
● **CVBS.T1**	COMPOSITE VIDEO BASEBAND SIGNAL TH001
● **C.FC**	CHROMA. CAMCORDER
● **C-IN**	CHROMA INPUT FROM SCART SWITCH
● **C-PIP**	CHROMA INPUT FROM PIP
● **C-TV**	CHROMA MAIN PICTURE
● **DEGAUSS**	DEGAUSS SIGNAL
● **DRV**	HORIZONTAL SUPPLY
● **DSC**	DIGITAL SANDCASTLE FROM TDA 9151
● **E.W.**	EAST - WEST DRIVE OUTPUT
● **FB DETEC**	FAST BLANKING DETECT
● **FB-PIP**	FASTBLANK SIGNAL FROM PIP
● **FB-SC/PIP**	FAST BLANKING SIGNAL FROM PIP/SCART
● **FOC**	VERTICAL FOCUS
● **FOCUS**	FOCUS SUPPLY
● **G-SC/PIP**	GREEN SIGNAL FROM SCART/PIP
● **HA**	HOR. REFERENCE PULSE FROM TDA 9141
● **HA-PIP**	HORIZONTAL SYNC OUTPUT FOR PIP
● **HDFL**	HORIZONTAL SYNC. OUT
● **HDRV**	SYNCRONIZATION SIGNAL FROM DEFLECTION LINE
● **HFB**	HORIZONTAL FLYBACK SIGNAL
● **HP3**	FLYBACK PULSE FOR DYNAMIC FOCUS
● **HTR 1/2**	HEATER
● **I CUT**	CUT OFF CURRENT
● **IIC-CL-1**	I2C CLOCK BUS 1
● **IIC-CL-2**	I2C CLOCK BUS 2
● **IIC-DA-1**	I2C DATA BUS 1
● **IIC-DA-2**	I2C DATA BUS 2
● **IR**	INFRARED
● **LDFL**	LINE LOCKED CLOCK 27 MHz
● **LDR**	LED DISPLAY
● **NORM T1**	SWITCH B1
● **M-RESET**	MAIN RESET TO MICROPROCESSOR
● **PLL-ON**	ENABLE DEFLECTION PLL
● **PROT**	PROTECTION INPUT OF THE TDA9151
● **R-SC/PIP**	RED SIGNAL FROM SCART/PIP
● **SIF**	SOUND IF TERRESTRIAL 10 BH002
● **SK**	SPOT KILLER TO DEFLECTION PART
● **STB-LED**	STANDBY LED SWITCH LINE
● **T1.AM-AF**	AM-AF OUT
● **T1.CVBS**	COMPOSITE VIDEO BASEBAND SIGNAL 6 BH002
● **U-PIP**	U INPUT FROM PIP
● **VA**	VERTICAL REFERENCE OUT FROM TDA 9141
● **VA-PIP**	VERTICAL SYNC OUTPUT FOR PIP
● **VDFL**	VERTICAL SYNC. OUT
● **V-PIP**	V INPUT FROM PIP
● **VR**	VERTICAL RETRACE
● **VSAW**	VERTICAL SAWTOOTH FROM THE VERT. DEFLECT.
● **+VFB**	VOLTAGE FROM DEFLECTION PART
● **+VIDEO**	SUPPLY VOLTAGE FROM SMPS TO CRT
● **+V**	POSITIVE SUPPLY FOR IF002
● **-V**	NEGATIVE SUPPLY FOR IF002
● **Y.FC**	Y.VIDEO CAMCORDER
● **Y-IN**	Y INPUT FROM SCART SWITCH
● **Y-PIP**	Y/VIDEO MAIN PICTURE
● **Y-TV**	Y INPUT FROM PIP
● **8 VSB**	8 V STANDBY
● **5 V**	5V POWER SUPPLY
● **9 V**	9V POWER SUPPLY
● **12 V**	12V POWER SUPPLY

Technical documentation to be used by maintenance technicians only • Documentation technique exclusivement destinée aux professionnels de la maintenance • Diese Angaben und Hinweise sind ausschließlich für den Service des Fachhändlers bestimmt • Documentazione tecnica destinata esclusivamente ai tecnici dell'assistenza • Documentación técnica destinada exclusivamente a los profesionales de mantenimiento

THOMSON CONSUMER ELECTRONICS

THOMSON CONSUMER ELECTRONICS GMBH & CO. OHG
- SERVICE -
GÖTTINGER CHAUSSEE 76 • 30453 HANNOVER (GERMANY)

The description and characteristics given here are of informative significance only, and non committal. To keep up the high quality of our products, we reserve the right to make any changes or improvement without previous notice. • Les descriptions et caractéristiques figurant sur ce document sont données à titre d'information et non d'engagement. En effet, soucieux de la qualité de nos produits, nous nous réservons le droit d'effectuer, sans préavis, toute modification ou amélioration. • Die Beschreibungen und Daten in dieser Anleitung dienen nur zur Information und sind nicht bindend. Um die Qualität unserer Produkte ständig zu verbessern, behalten wir uns das Recht auf Änderungen vor. • Le descrizioni e le caratteristiche date su questo documento sono fornite a semplice titolo informativo e senza impegno. Ci riserviamo il diritto di eseguire, senza preavviso, qualsiasi modifica o miglioramento. • Las descripciones y características que figuran en este documento se dan título de información y no de compromiso. En efecto, en bien de la calidad de nuestros productos, nos reservamos el derecho de efectuar, sin previo aviso, cualquier modificación o mejora.

Service - Information

TELEFUNKEN

ICC 11 DM

TECHNICAL DATA - CARACTERISTIQUES PRINCIPALES - TECHNISCHE DATEN
DATI TECNICI - CARACTERISCAS DEL APARATO

Type of set : Type d'appareil : Geräteart : tipo d'apparecchio : Tipo de aparato :	Color receiver with 99 program control. Récepteur couleur à télécommande 99 programmes. Farbfernseher mit 99 Programmplätzen . ricevitore a colori con telecomando 99 programmi. Receptor color con mando 99 programas.		
Standards received : Standards reçus : Empfangs-Standard : standard ricevuti : Recepción :	Standard B, D, K, L' 625 lines,bands I and III Norme B, D, K, L' 625 lignes,bandes I et III Norm B, D, K, L' 625 Zeilen,Band I und III norma B, D, K, L' 625 linne,bande I e III Norma B, D, K, L' 625 lineas,bandas I y III		Standard G, I, L, K' 625 lines,bands IV and V Norme G, I, L, K' 625 lignes,bandes IV et V Norm G, I, L, K' 625 Zeilen,Band IV und V norma G, I, L, K' 625 linne,bande IV e V Norma G, I, L, K' 625 lineas,bandas IV y V
Colour decoding system : Système de décodage couleur : Farbsystem : sistema di decodifica colore : Sistema de decodificación color :	PAL / SECAM / NTSC		
Channel selection : Sélection des programmes : Programmwahl : selezione del programmi : Selección de los programas :	Selection of 99 programs by remote control with frequency synthesis. Sélection des 99 programmes par télécommande à synthèse de fréquence. Wahl der 99 Programme über Fernbedienung mit Spannungssynthese. selezione del 99 programmi con telecommando a sintesi di freqenza. Selecciön de 99 programas por telemando sintesis de frecuencia.		
Cathode ray tube 110 ° : Tube cathodique 110 ° : Bildröhre 110 ° : tubo catodico 110 ° : Tubo catódico 110 ° :	Diagonal : 63 cm Diagonale : 63 cm Diagonale : 63 cm diagonal : 63 cm Diagonal : 63 cm	70 cm 70 cm 70 cm 70 cm 70 cm	4/3 4/3 4/3 4/3 4/3
	Z = 4 Ω		
Sound power : Puissance du son : Ausgangsleistung : potenza del suono : Potencia del sonido :	2 X 16 W RMS		for 10 % distortion. pour une distorsion de 10 %. Klirrfaktor 10 % per una distorsione del 10 %. para una distorsion del 10 %.
Power supply : Alimentation : Stromversorgung : alimentazione : Alimentación :	220 V - 50 Hz		
Power consumption : Consommation : Leistungsaufnahme : consumo : Cosumo :	120 Wh		

The description and characteristics given here are of informative significance only, and non committal. To keep up the high quality of our products, we reserve the right to make any changes or improvement without previous notice. • Les descriptions et caractéristiques figurant sur ce document sont données à titre d'information et non d'engagement. En effet, soucieux de la qualité de nos produits, nous nous réservons le droit d'effectuer, sans préavis, toute modification ou amélioration. • Die Beschreibungen und Daten in dieser Anleitung dienen nur zur Information und sind nicht bindend. Um die Qualität unserer Produkte ständig zu verbessern, behalten wir uns das Recht auf Änderungen vor. • Le descrizioni e le caratteristiche date su questo documento sono fornite a semplice titolo informativo e senza impegno. Ci riserviamo il diritto di eseguire, senza preavviso, qualsiasi modifica o miglioramento. • Las descripciones y características que figuran en este documento se dan a título de información y no de compromiso. En efecto, en bien de la calidad de nuestros productos, nos reservamos el derecho de efectuar, sin previo aviso, cualquier modificación o mejora.

FRONT CONNECTION BOARD - MODULE PRISES EN FACADE ET INTERCONNEXION DU CLAVIER
FRONTANSCHLUSSPLATTE
PIASTRA CONNESSIONE FRONTALE - PLÁTINA MANDOS FRONTAL

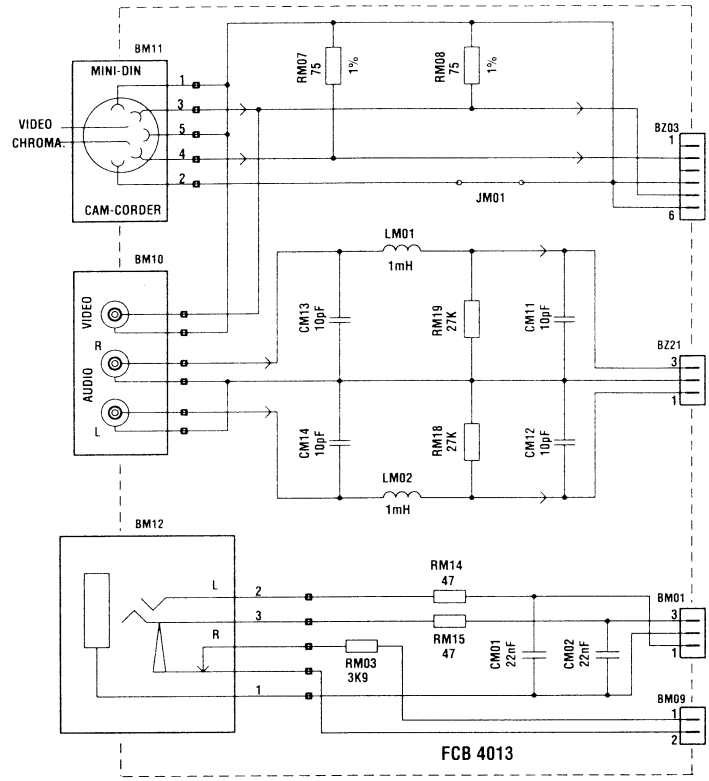

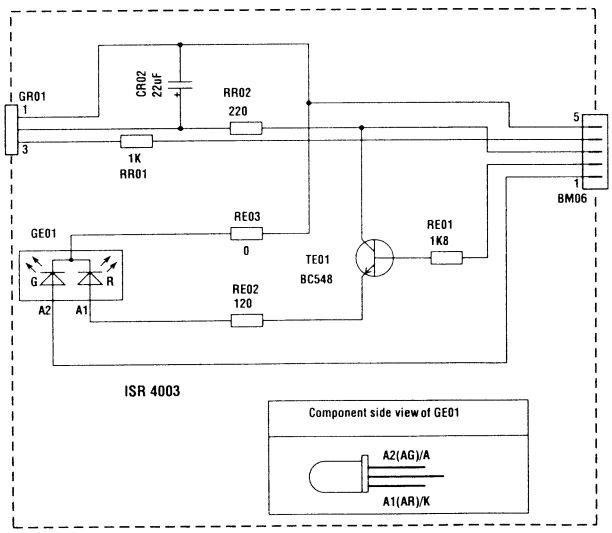

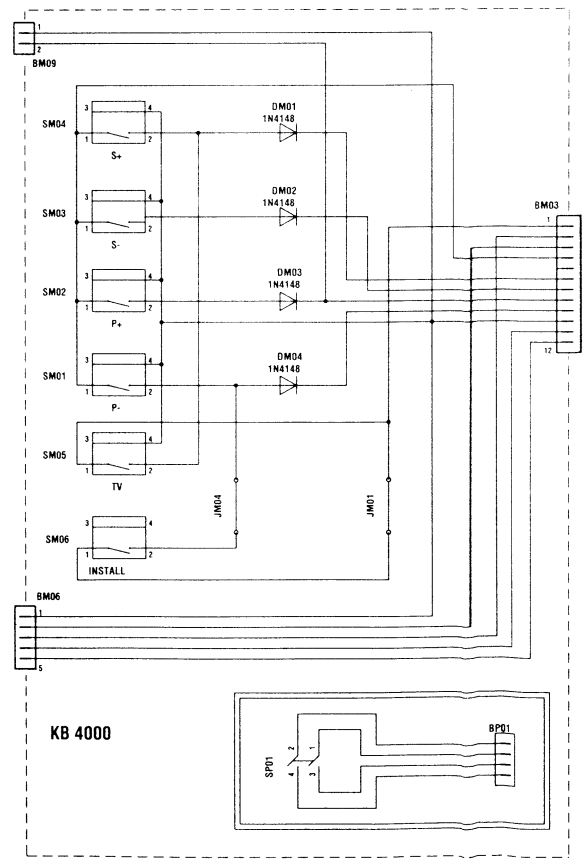

SATELLITE SUB-MODULE - SOUS-MODULE SATELLITE - SUBMODUL SATELLIT
SOTTOMODULO SATELLITE - SUBMÓDULO SATELITE

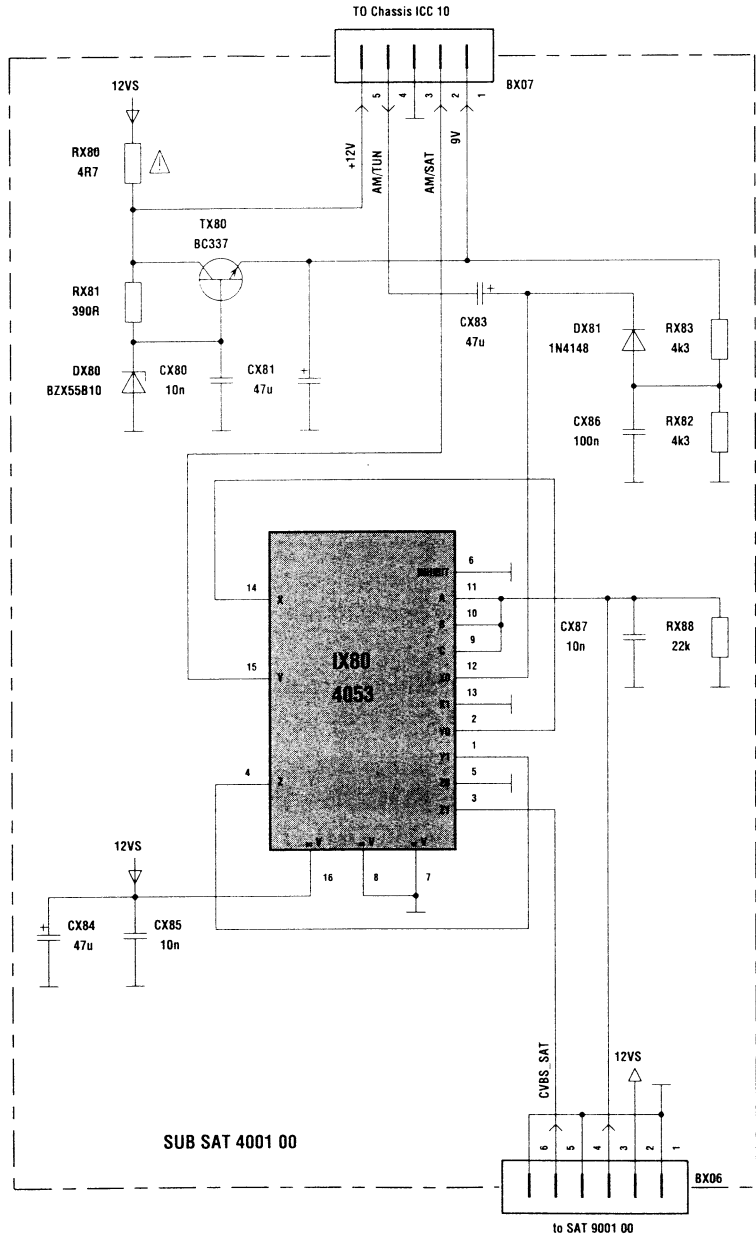

IF AMPLIFIER - AMPLIFICATEUR FI - ZF VERSTÄRKER - AMPLIFICATORE FI - AMPLIFICADOR FI

For information only

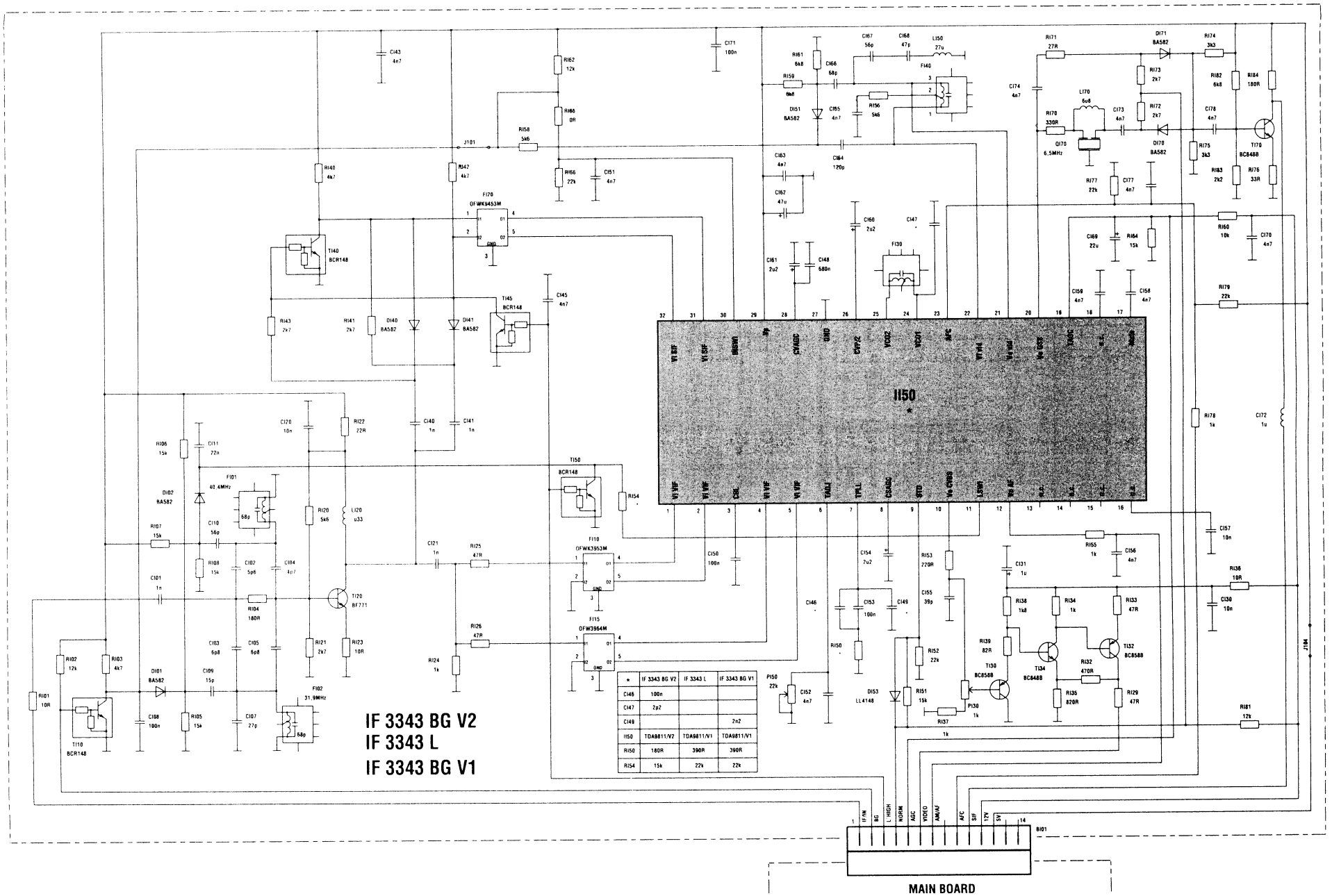

*	IF 3343 BG V2	IF 3343 L	IF 3343 BG V1
CI46	100n		
CI47	2p2		
CI49			2n2
II50	TDA9811/V2	TDA9811/V1	TDA9811/V1
RI50	180R	390R	390R
RI54	15k	22k	22k

SCART INTERFACE MODULE - MODULE INTERFACE PERITELEVISION - SCART INTERFACE
MODULO PRESA PERITEL - MODULO EUROTOMA

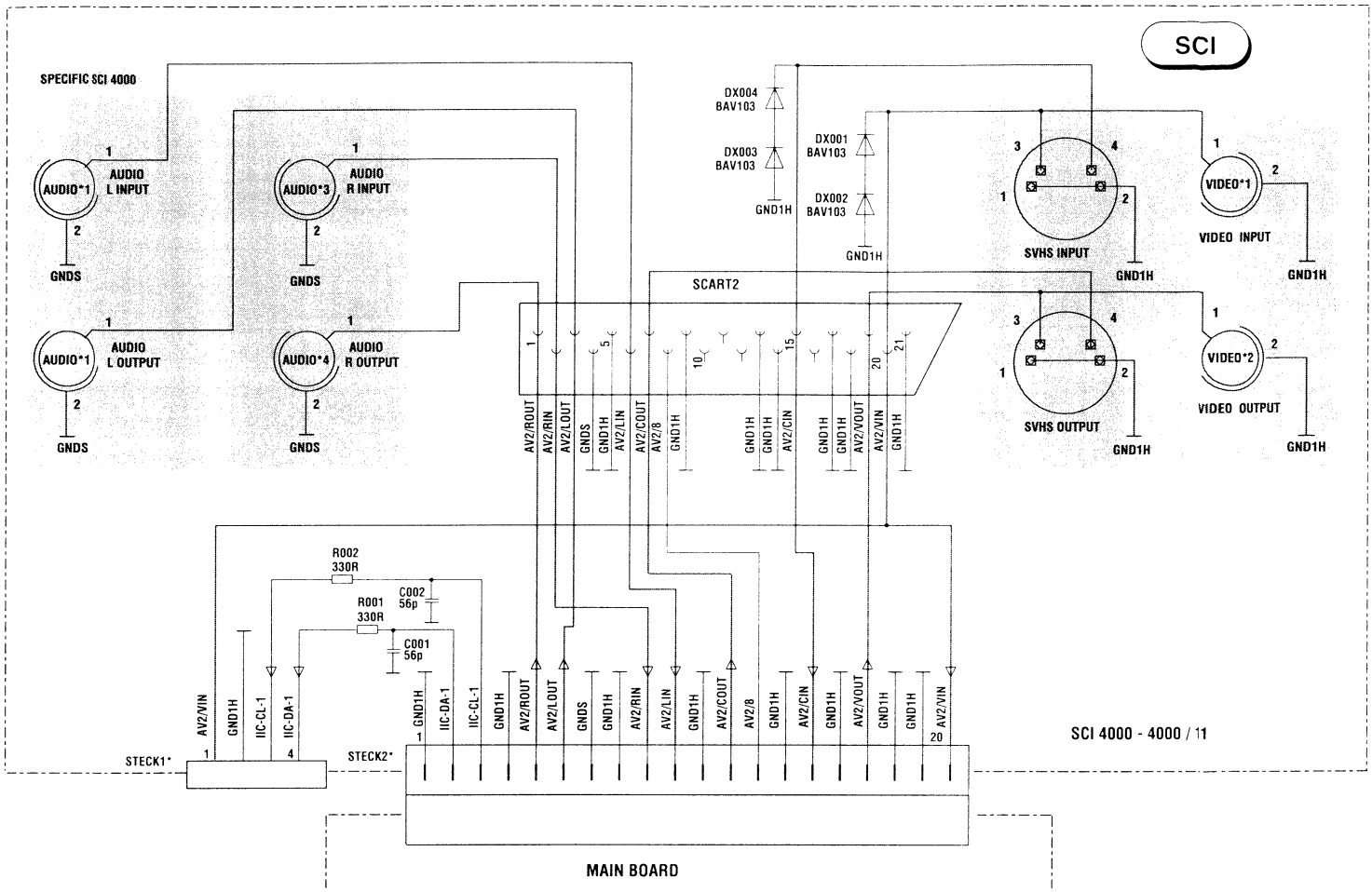

FOCUS MODULE - MODULE FOCUS - FOKUS BAUSTEIN
MODULO FUOCO - MODULO FOCUS

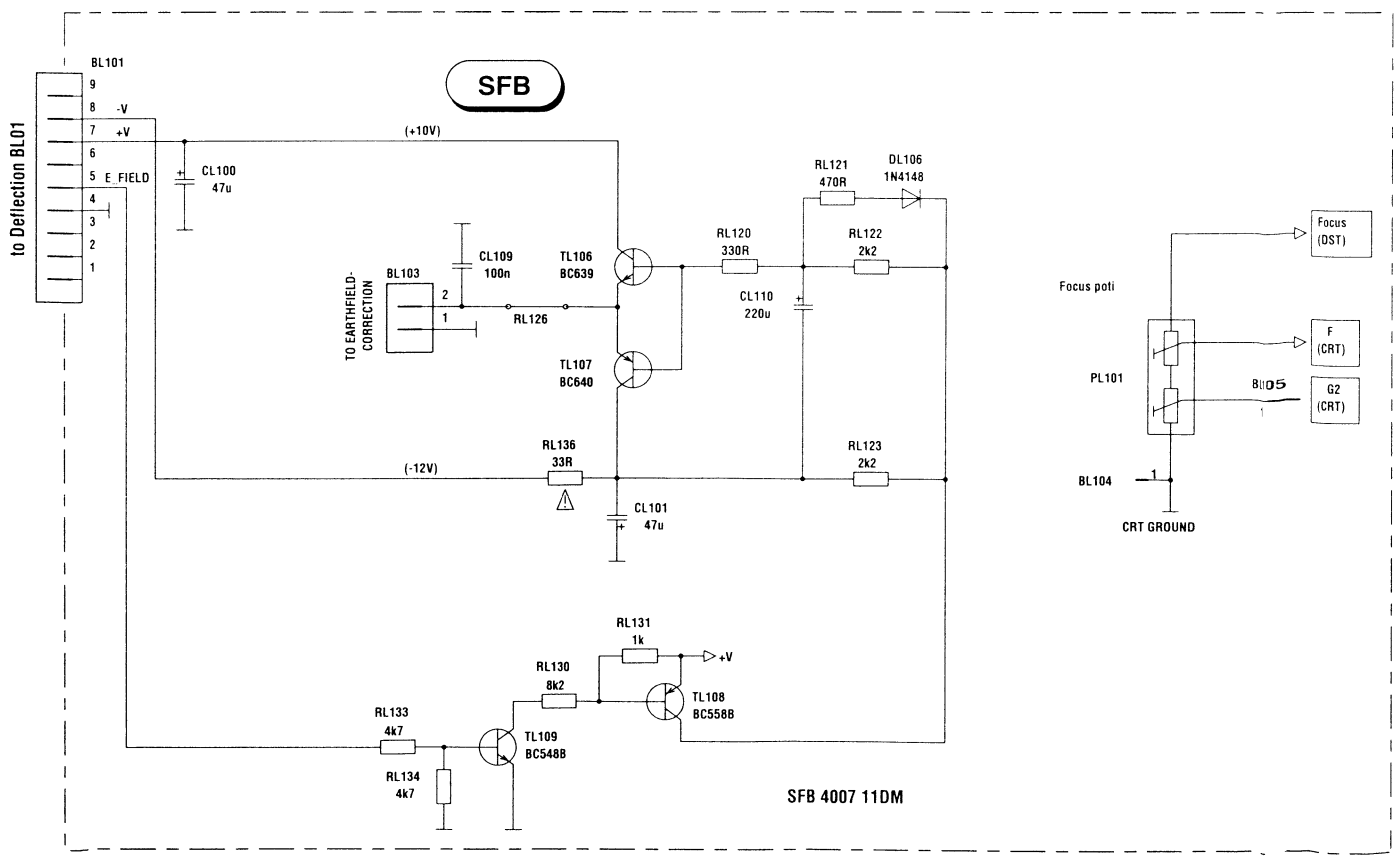

VHF - UHF TUNER

For information only

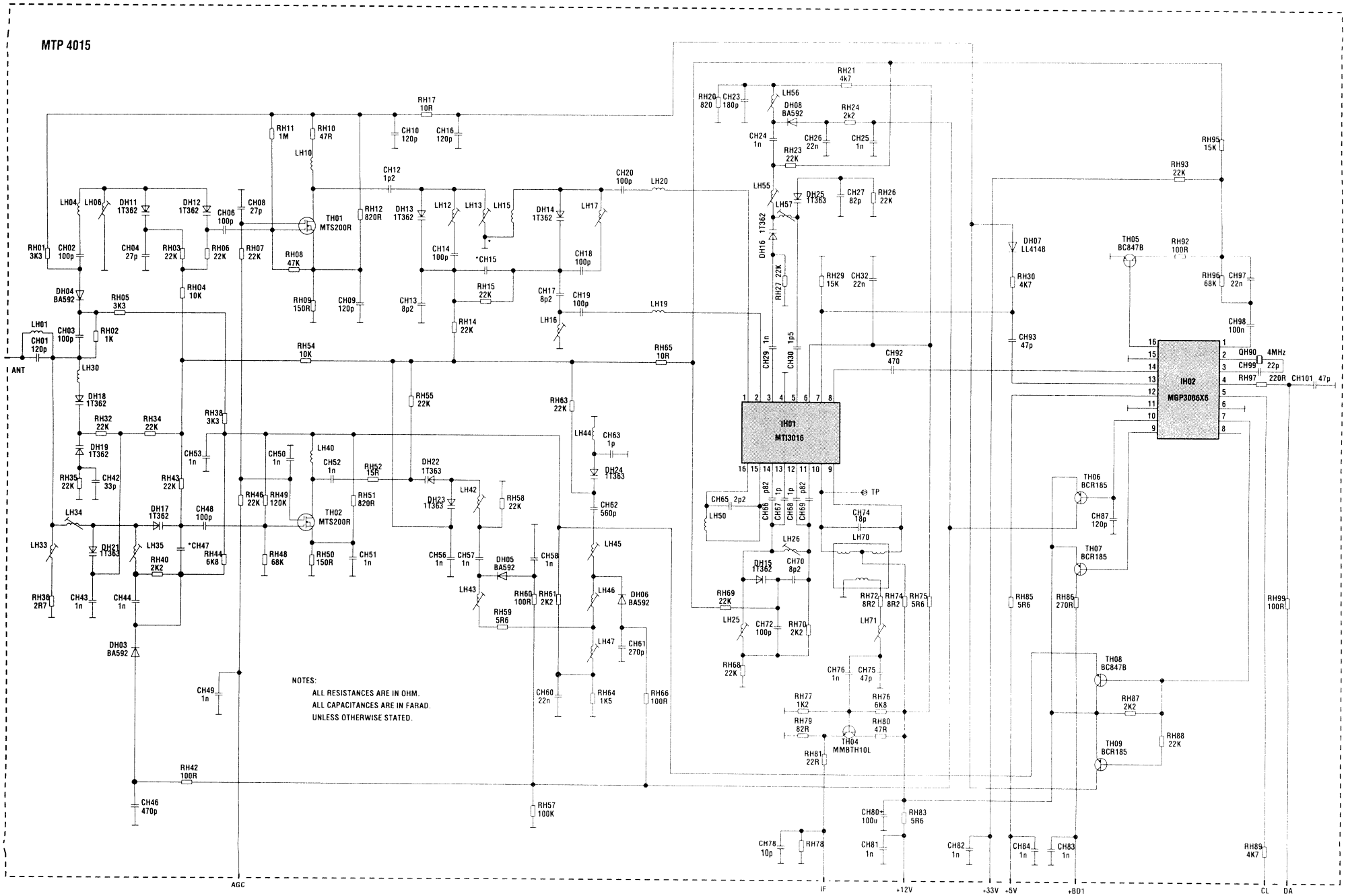

TO " MAIN BOARD "

VIDEO AMPLIFIER - AMPLIFICATEURS VIDEO - VIDEOVERSTÄRKER - AMPLIFICATORE VIDEO - AMPLIFICADOR VIDEO

CRT

CRT BS 4117 11 DM

CRT BS 4127 11 DM

	BB05 ⇨	*
CRT BS 4117 11 DM	X	-
CRT BS 4127 11 DM	-	X

X Inserted

from Deflection BL03

from VM

from MAIN BOARD

IB03 TEA5101B

IB02 TEA5101B

IB01 TEA5101B

ASY LC-MOD TOKO

GREEN DELAY

BLUE DELAY

RED DELAY

10ms 3.8Vpp-V

32us 1v2 3.8Vpp-H

32us 57v 130Vpp-H

32us 57v 135Vpp-H

32us 57v 145Vpp-H

Focus

BB03 UG2

BB05 GND THROUGH RESISTOR

BB04 CRT GROUND

FOCUS MODULE - MODULE FOCUS - FOKUS BAUSTEIN
MODULO FUOCO - MODULO FOCUS

CRT

* CRT BS 4106 11 DM
CRT BS 4103 11 DM

IB03 TEA5101B

IB02 TEA5101B

IB01 TEA5101B

ASY LC-MOD TOKO

GREEN DELAY

BLUE DELAY

RED DELAY

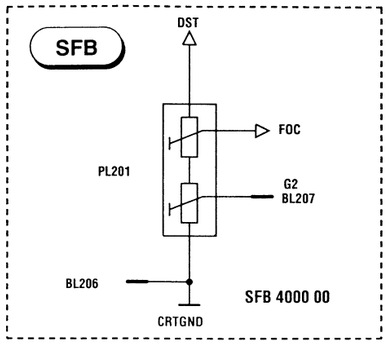

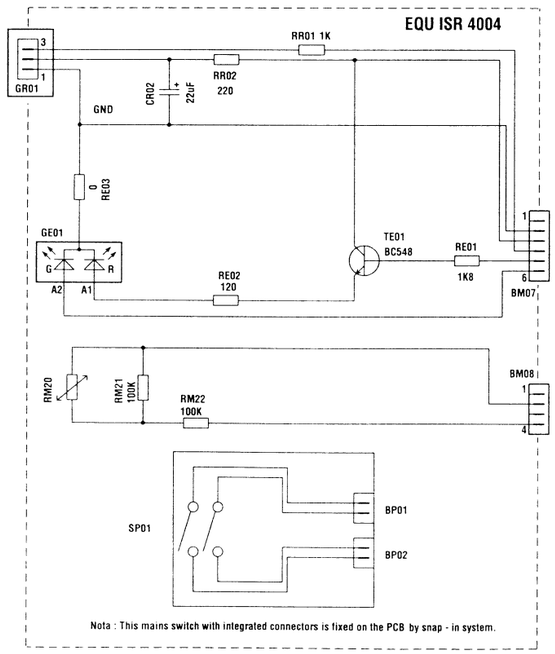

Nota : This mains switch with integrated connectors is fixed on the PCB by snap - in system.

VIDEO MODULE - MODULE VIDEO - VIDEO BAUSTEIN - MODULO VIDEO - MÓDULO VIDEO

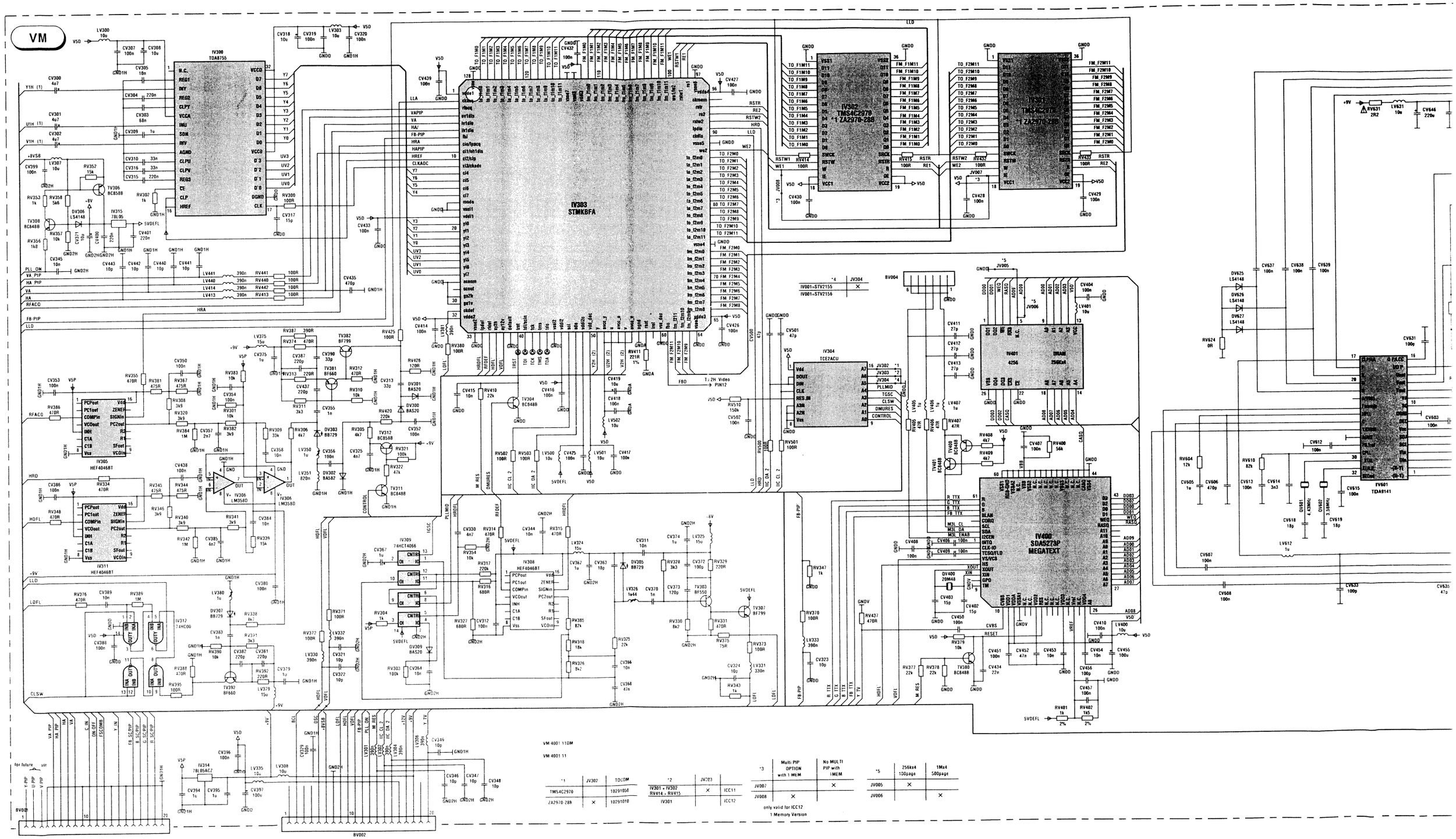

VM 4001 11DM

VM 4001 11

*1	JV302	TOCOM
TMS4C2970		10291050
ZA2970-28B	×	10291010

*2	JV303	
IV301 + IV302 RV414 + RV415	×	ICC11
IV301		ICC12

*3	Multi PIP OPTION with 1 MEM	No MULTI PIP with 1MEM
JV007		×
JV008	×	

only valid for ICC12
1 Memory Version

*5	256kx4 100page	1Mx4 500page
JV005	×	
JV006		×

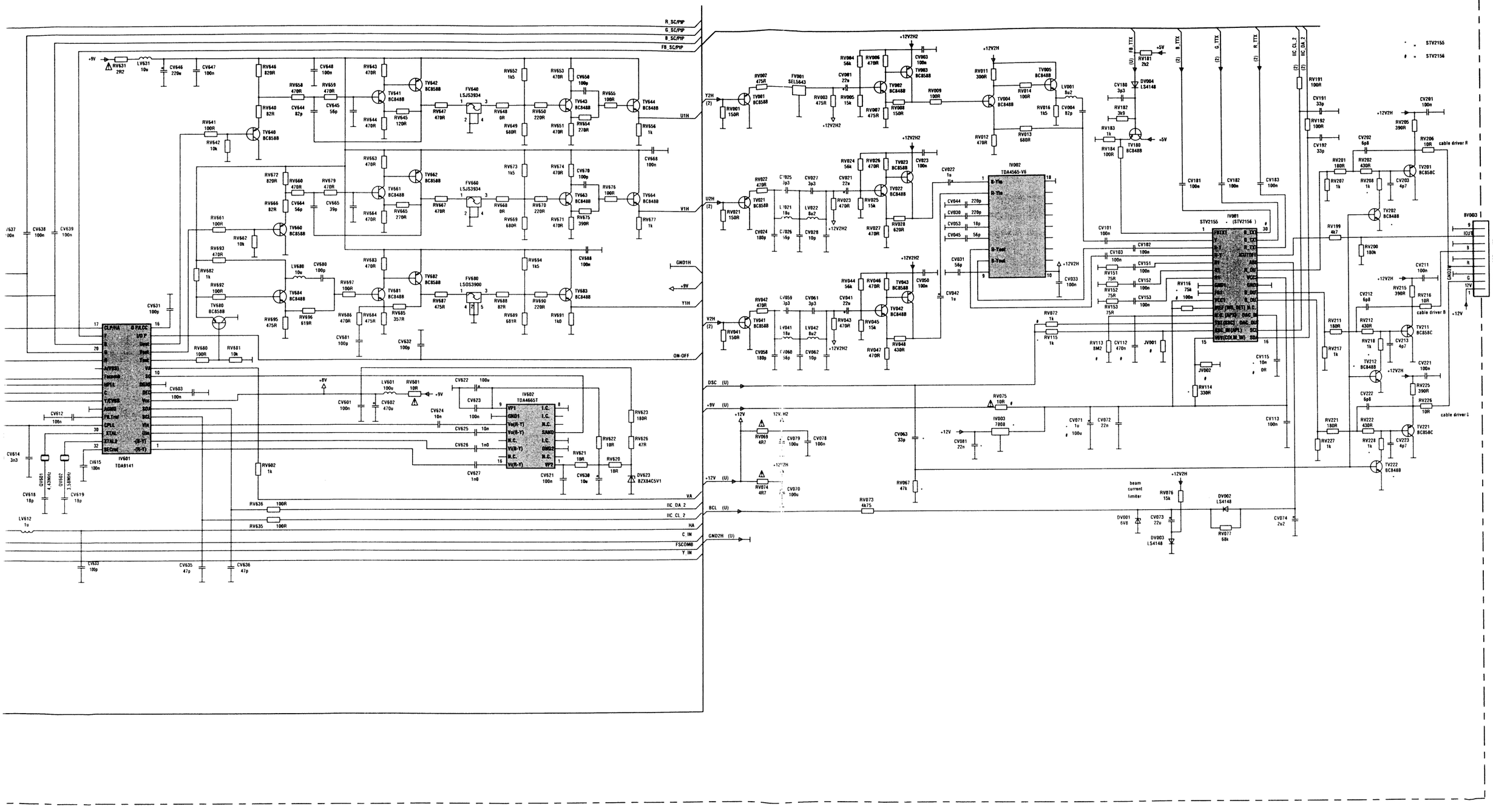

R_SC/PIP
G_SC/PIP
B_SC/PIP
FB_SC/PIP
U1H
V1H
GND1H
Y1H
ON-OFF
IV601
TDA9141
IV602
TDA4665T
IV002
TDA4565-V6
IV001
STV2155
IV003
7808
DSC (U)
+9V (U)
+12V (U)
BCL (U)
GND2H (U)
VA
IIC_DA_2
IIC_CL_2
HA
C_IN
FSCOMB
Y_IN
Y2H
U2H
V2H
FB_TTX
B_TTX
G_TTX
R_TTX
IIC_CL_2
IIC_DA_2
BV003
outputs to CRT amplifiers
cable driver R
cable driver B
cable driver G
beam current limiter

MAIN SCHEMATIC DIAGRAM - SCHEMA PLATINE PRINCIPALE - SCHALTUNG LEITERPLATTE KPL. - SCHEMA PIASTRA PRINCIPALE - ESQUEMA PLATINA PRINCIPAL

MAIN

(R)
RP 4000 11DM

(H)
HP 4001 00

(P)
PP 4000 11DM

Legend :
CVBS : Name of signal
(P) : Origin or destination

⚠ Indicates critical safety components and identical components should be used for replacement.

Le remplacement des éléments de sécurité (repérés avec le symbole ⚠) par des composants non homologués selon la Norme CEI 65 entraine la non-conformité de l'appareil.
Dans ce cas, la responsabilité du fabricant n'est plus engagée.

Wenn Sicherheitsteile (mit dem Symbol ⚠ gekennzeichnet) durch nicht normgerechte Teile ersetzt werden, erlischt die Haftung des Herstellers.

La sostituzione degli elementi di sicurezza (marchi con il segno ⚠) con componenti non omologati secondo la norma CEI 65 comporta la non conformità dell'apparecchio.
In tal caso è esclusa la responsabilità del costruttore.

La substitución de elementos de seguridad (marcados con el simbolo ⚠) por componentes no homologados segun la norma CEI 65, provoca la no conformidad del aparato.
En ese caso el fabricante cesa de ser responsable

Note :
During measurements in the power supply unit
- Use the primary power unit ground (Emit. TP060)
Attention :
Mesure dans le bloc alimentation
- Utiliser la masse du bloc alimentation (Emet. TP060)
Achtung :
Bei Messungen im Primärnetzteil
- Primärnetzteilmasse verwenden (Emit. TP060)
Attenzione :
misure nell alimentatore primario
- usare massa alimentazione primario (Emet. TP060)
Cuidado :
Medida en el bloque de alimentacion
- Utilizar la masa del bloque de alimentacion (Emet. TP060)

Part of board connected to mains supply
Partie du châssis reliée au secteur
Primärseite des Netzteils
Parte dello chassis collegata alla rete
Parte del chassis conectar a la red

* Standby only

L

(A)
AP 4000 11DM

(Z)
SP 4000 00

(P) PP 4000 11DM

(X) XP 4000 00

(D)
DP 4009 11

AUDIO MODULE - MODULE AUDIO - TON SIGNAL BAUSTEIN - MODULO AUDIO - MÓDULO AUDIO

*	IS40	BS05	BS06	JS32	JS33
AM/FM 9110	MSP3400	—	—	×	×

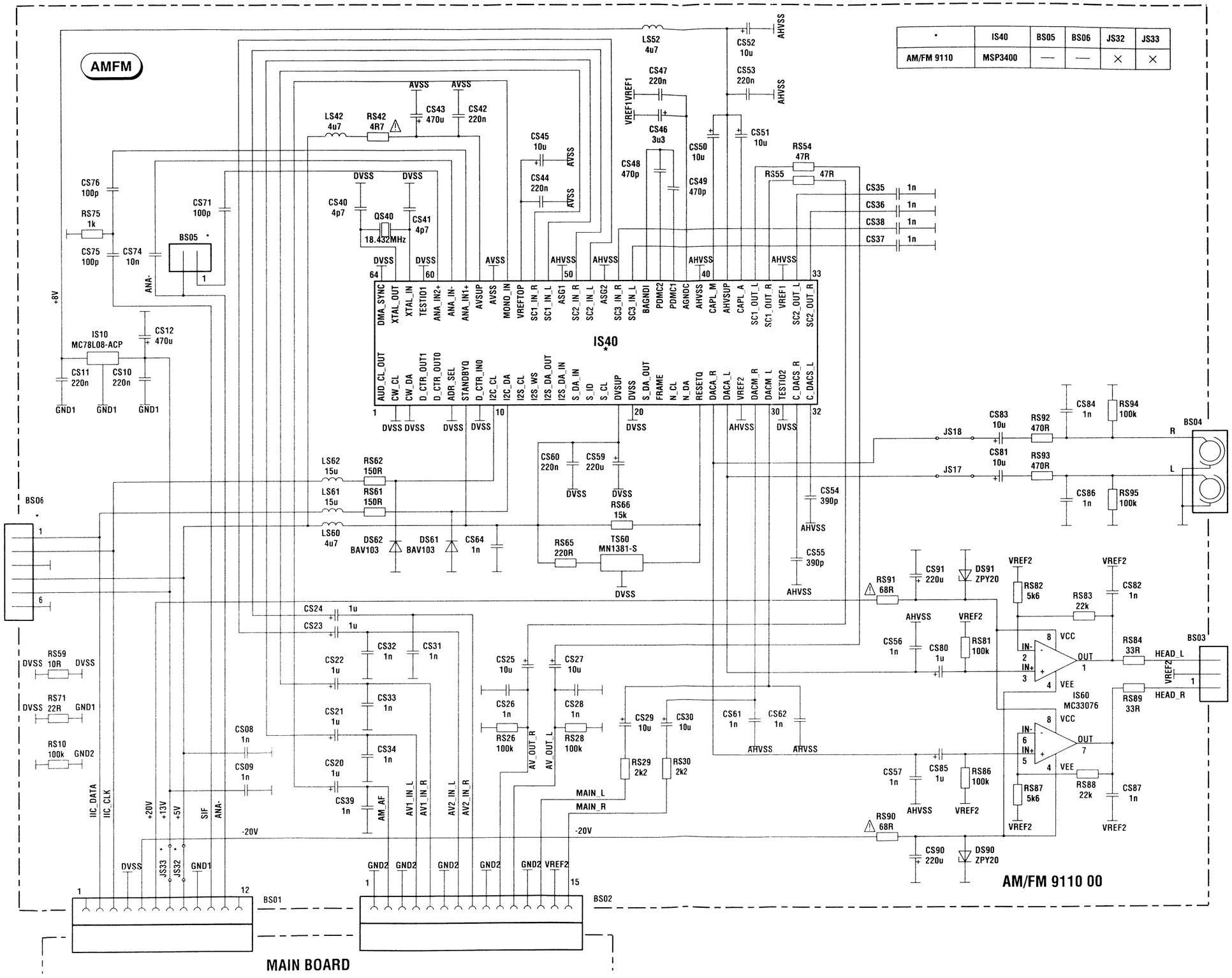

PICTURE IN PICTURE - MODULE IMAGE DANS L'IMAGE - BILD IM BILD BAUSTEIN - MODULO IMMAGINE NELL' IMMAGINE - MÓDULO IMAGEN EN IMAGEN

PIP 4001 00

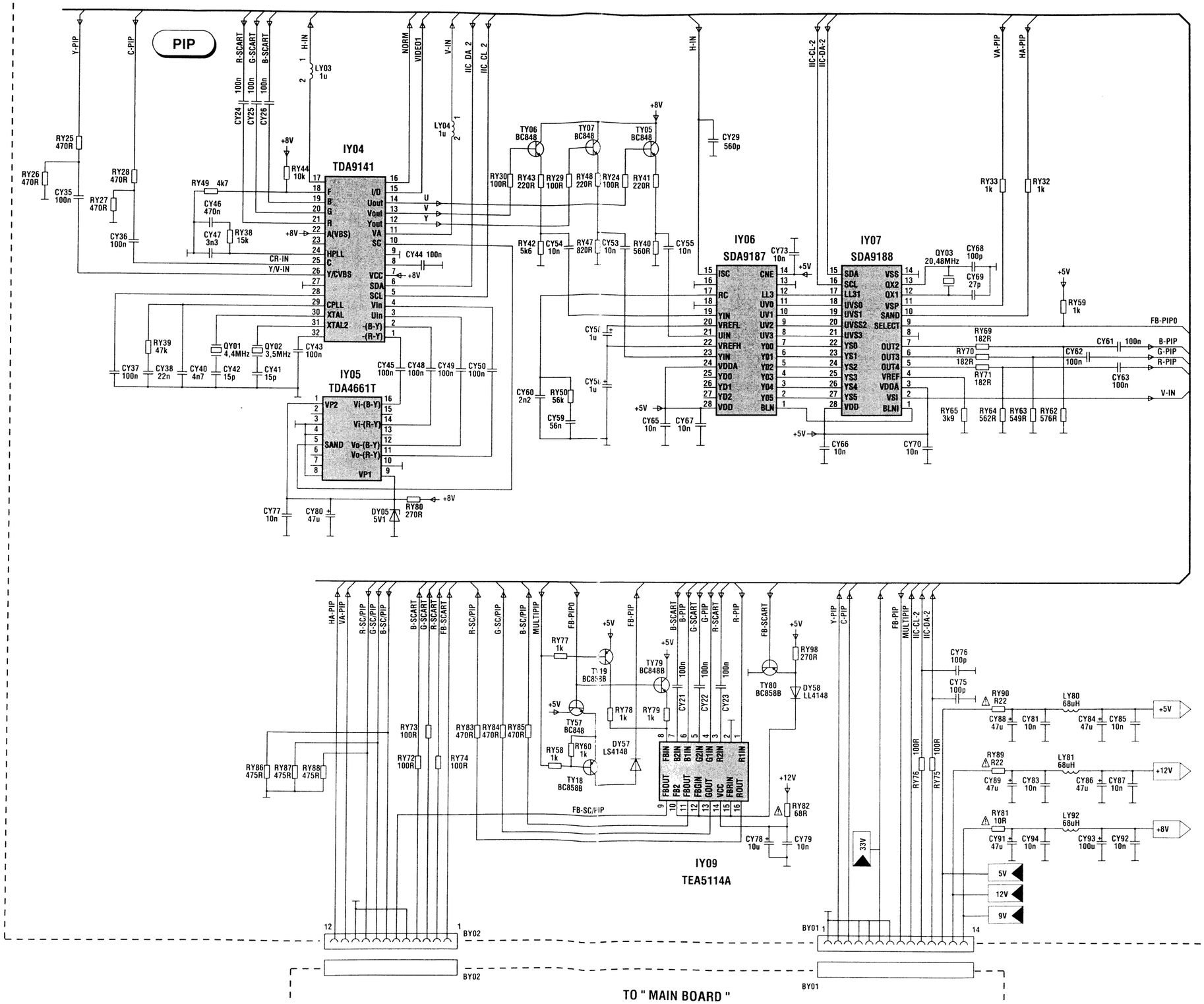
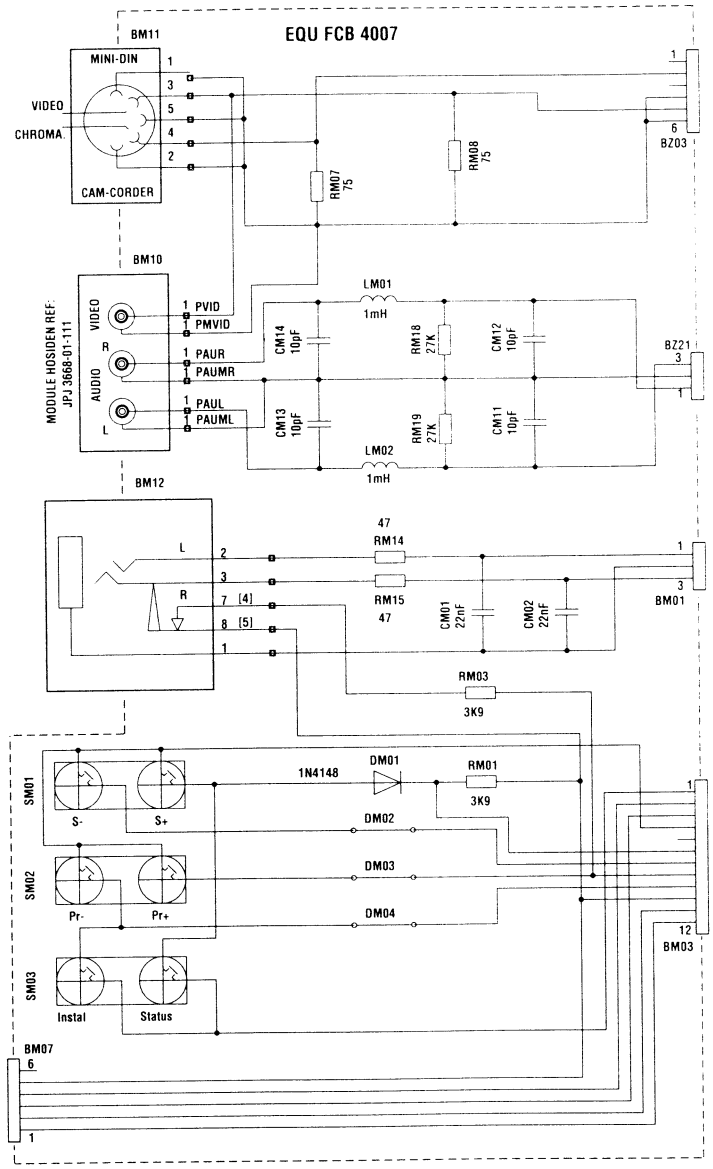
FRONT CONNECTION BOARD - MODULE PRISES EN FACADE ET INTERCONNEXION DU CLAVIER
FRONTANSCHLUSSPLATTE
PIASTRA CONNESSIONE FRONTALE - PLÁTINA MANDOS FRONTAL